THE INSTALLER'S HANDBOOK FOR HEATING SYSTEMS CONTROLLED WITH ACVMAX

VOLUME 0
Introduction

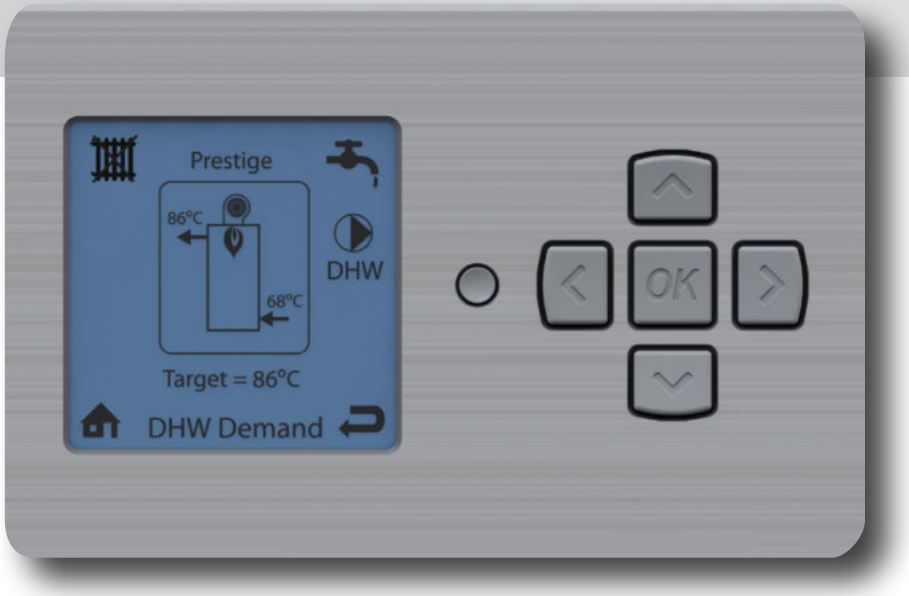

Prestige 24 - 32 Solo /Excellence
Prestige 42 - 50 - 75 - 100 - 120 Solo
HeatMaster 25 C
HeatMaster 25 - 35 - 45 - 70 - 85 - 120 TC
WaterMaster 25 - 35 - 45 - 70 - 85 - 120
HeatMaster 201

Applicable to appliances manufactured from March 2019, equipped with at least software version (DSP) 4.04

TABLE OF CONTENTS

VOLUME 0 - INTRODUCTION

RECOMMENDATIONS 0-3
Important instructions - read before proceeding 0-3
Applicability 0-3
USER'S GUIDE 0-4
How to use this manual 0-4

VOLUME 1 - ACVMAX MENUS AND FUNCTIONS

ACVMAX DESCRIPTION AND OPERATION 1-3
ACVMax Operating information 1-3
Control panel description 1-3
Home page description 1-3
Appliance Easy setup (EZ Setup) 1-4
Selecting the language 1-4
Installer Code 1-4
Installer menu structure 1-5
Installer menu description 1-5
ACVMAX PARAMETERS FOR THE SPECIALIST 1-25
List of Status Line Messages 1-25
Appliance codes 1-26
Factory settings and reset values 1-26
ACVMax menu structure 1-27

VOLUME 2 - SYSTEM DIAGRAMS AND ACVMAX SETUP

USER'S GUIDE 2-3
General 2-3
Resistance of the temperature sensors 2-3
PRESTIGE 3WV 2-4
Electrical Characteristics Prestige 24-32 Solo/Excellence 2-4
Pumps (Prestige 3WV) 2-6
Preset Configuration 1 2-7
Preset Configuration 2 2-8
Preset Configuration 3 2-9
Preset Configuration 4 2-10
PRESTIGE SOLO 2-11
Electrical Characteristics Prestige 42 - 50 - 75 Solo 2-11
Electrical Characteristics Prestige 100-120 Solo 2-11
Pumps (Prestige Solo) 2-14
Preset Configuration 1 2-15
Preset Configuration 4 2-21
Preset Configuration 3 2-23
Preset Configuration 7 2-25
Preset Configuration 9 2-27
Preset Configuration 12 2-28
HEATMASTER 25 C, HEATMASTER TC / WATERMASTER, HEATMASTER 201 2-29
Electrical Characteristics HeatMaster® 25 C, HeatMaster® 25-35-45 TC, and WaterMaster 25 - 35 - 45 2-29
Electrical Characteristics of HeatMaster® 70-85 TC, WaterMaster 70 - 85 2-32
Electrical Characteristics of HeatMaster® 120 TC, WaterMaster 120 2-32
Electrical Characteristics HeatMaster® 201 2-34
Pumps (HeatMaster 25C, 25-35-45-70-85-120TC, 201) 2-36
Pumps (WaterMaster) 2-36
HEATMASTER C, HEATMASTER TC 2-37
Preset Configuration 16 2-37
Preset Configuration 15 2-39
Preset Configuration 15 2-40

VOLUME 3 - CASCADE SYSTEMS

GENERAL INFORMATION 3-3
User's Guide 3-3
Operating Principles of an ACVMax-Controlled Cascade 3-3
MENUS AND SCREENS DESCRIPTION 3-4
Structure of the ACVMax cascade menu 3-10
INSTALLATION OF THE CASCADE BOILERS 3-11
General process for cascade installation 3-11
INSTALLATION AND CONFIGURATION OF CASCADE SYSTEMS 3-12
Assembling the Cascade Mounting rack 3-12
Hydraulic connections of Cascade Systems 3-14
Chimney connections of Cascade Systems 3-16
Cascade system connection (4-boiler Cascade) 3-18
Cascade start-up process 3-19
Accessing the Cascade Autodetection page 3-19
Preset Configuration 2 3-20
Preset Configuration 5 3-24

VOLUME 4 - CHIMNEY CONNECTIONS

GENERAL RECOMMENDATIONS FOR CHIMNEY CONNECTION 4-3
CHIMNEY CONNECTION CHARACTERISTICS FOR PRESTIGE BOILERS 4-4
CALCULATION OF FLUE PIPE SYSTEM - PRESTIGE BOILERS 4-5
Calculation of the Flue Pipe Length 4-5
Prestige Solo Cascade : maximum length of flue pipes 4-6
COMPONENTS FOR FLUE PIPE SYSTEM - PRESTIGE BOILERS 4-7
CHIMNEY CONNECTION CHARACTERISTICS FOR HEATMASTER C, TC AND WATERMASTER APPLIANCES 4-9
CALCULATION OF FLUE PIPE SYSTEM - HEATMASTER C, TC AND WATERMASTER APPLIANCES 4-10
Calculation of the flue pipe length 4-10
HeatMaster/WaterMaster Cascade : maximum length of flue pipes 4-11
COMPONENTS FOR FLUE PIPE SYSTEM - HEATMASTER C, TC AND WATERMASTER APPLIANCES 4-12
CHIMNEY CONNECTION CHARACTERISTICS FOR HEATMASTER 201 4-14
Chimney connection characteristics 4-14

VOLUME 5 - TROUBLESHOOTING

BLOCKAGE AND ERROR CODES 5-3

NOTE

This manual contains important information for the installer, with respect to the installation and set-up of the boiler.

This manual is only available on the Internet. Please check for the latest revision on our website (www.acv.com).

We accept no liability should any damage result from the failure to comply with the instructions contained in this technical manual.

Essential recommendations for safety

- It is prohibited to carry out any modifications to the appliance without the manufacturer's prior and written agreement.
- The appliance must be set up by a qualified installer, in accordance with applicable standards and regulations.
- The installation must comply with the instructions contained in the boiler's installation manual and with the standards and regulations applicable to heating systems.
- Failure to comply with the instructions in this manual could result in personal injury or a risk of environmental pollution.
- The manufacturer declines all liability for any damage caused as a result of incorrect installation or in the event of the use of appliances or accessories that are not specified by the manufacturer.

Essential recommendations for the correct operation of the appliance

- To guarantee the correct operation of the installation, it is essential to carry out the adjustments in accordance with the instructions in this manual.
- In order to ensure that the appliance operates correctly, it is essential to inspect and service the boiler every year.
- Faulty parts may only be replaced by genuine factory parts.

General remark

- The availability of certain models as well as their accessories may vary according to markets.
- The manufacturer reserves the right to change the technical characteristics and features of its products without prior notice. Please check for an updated version of this manual in the documentation page on the website www.acv.com.

IMPORTANT INSTRUCTIONS - READ BEFORE PROCEEDING

Essential recommendations for safety

- **This document is intended to be used by a factory trained and qualified heating contractor or service technician only. Read all instructions within this document and within the concerned appliance's Installation, Operation and Maintenance Manual before proceeding.**
- **It is recommended to follow the procedures in the steps given. Skipping or missing procedural steps could result in severe personal injury, death or substantial property damage.**
- **This appliance can be used by children aged from 8 years old and above and persons with reduced physical, sensory or mental capabilities or lack of experience and knowledge, if they have been given supervision or instruction concerning the use of the appliance in a safe way and understand the hazards involved.**
- **Children should be supervised to ensure that they do not play with the appliance.**

APPLICABILITY

This manual is applicable to appliances manufactured from March 2019 and equipped with an ACVMax controller running at least on software version 4.04.

To know the software version of the controller installed in your appliance, look at the information displayed just after the ON/OFF master switch has been pushed in to turn the appliance on.

- **Software version 3.03 does not support the appliance coding function. Please refer to the ACVMax System Control manual on the ACV website (ref. 660Y2800).**

If you smell gas:

- Immediately isolate the gas supply.
- Open windows and doors to ventilate the area.
- Do not use any electrical appliances and do not operate any switches.
- Immediately notify your gas supplier and/or your installer.

HOW TO USE THIS MANUAL

The Installer's Handbook is for the exclusive use of ACV-approved installers.

The manual is comprised of 6 volumes, containing each all relevant information to set up a complete system based on an appliance controlled with ACVMax.

Volume 0 - contains the general recommendations and an interactive table of contents for all the volumes.

Volume 1 - gives a general description of the ACVMax, as well as a detailed description of all the screens, menus and parameters, with the exception of the Cascade menus (see Volume 3).

Volume 2 - presents typical hydraulic diagrams for different system configurations, as well as the parameter settings for each configuration.

Volume 3 - provides all required information to set up a cascade system (Prestige Solo boilers only), i.e. electrical connection, hydraulic connection, chimney connection and the Cascade start up through the Cascade Autodetection function.

Volume 4 - gives information on the various chimney connections according to the selected chimney type.

Volume 5 - contains the blockage and error codes displayed on the ACVMax screen, which will allow the installer to troubleshoot the possible faults.

For any other heating system configuration than those in this manual, please contact your ACV repres entative.

THE INSTALLER'S HANDBOOK FOR HEATING SYSTEMS CONTROLLED WITH ACVMAX

VOLUME 1
ACVMax Menus and Functions

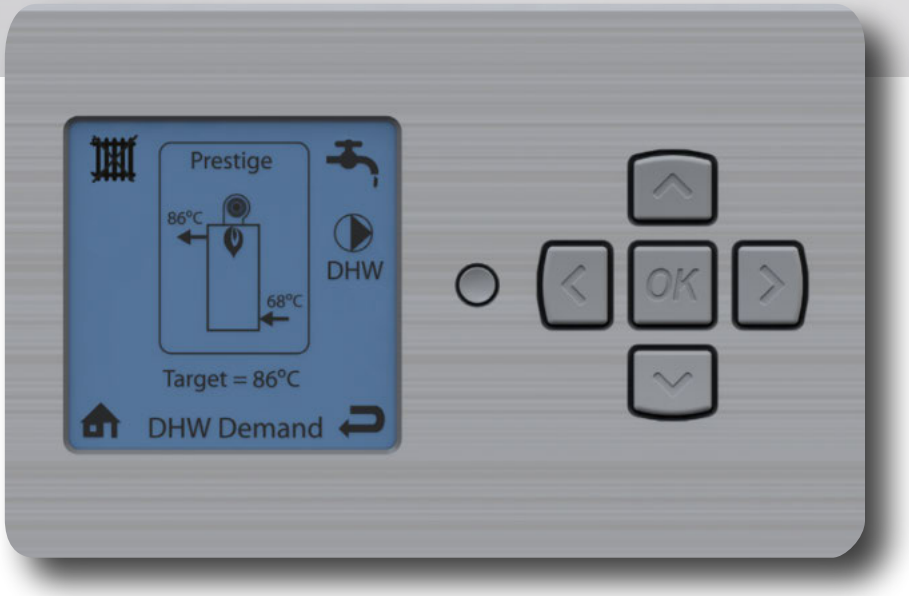

Prestige 24 - 32 Solo /Excellence
Prestige 42 - 50 - 75 - 100 - 120 Solo
HeatMaster 25 C
HeatMaster 25 - 35 - 45 - 70 - 85 - 120 TC
WaterMaster 25 - 35 - 45 - 70 - 85 - 120
HeatMaster 201

Applicable to appliances manufactured from March 2019, equipped with at least software version (DSP) 4.04

EXCELLENCE IN HOT WATER ACV

TABLE OF CONTENTS

VOLUME 1 - ACVMAX MENUS AND FUNCTIONS

ACVMAX DESCRIPTION AND OPERATION 1-3

ACVMax Operating information 1-3
Control panel description 1-3
Home page description 1-3
Appliance Easy setup (EZ Setup) 1-4
Selecting the language 1-4
Installer Code 1-4
Installer menu structure 1-5
Installer menu description 1-5
CH & DHW Settings ( ) -->> CH Settings ( ) 1-6
CH & DHW Settings ( )-->> DHW Setting ( ) 1-12
CH & DHW Settings ( )-->> Boiler Settings ( ) 1-16
Reset all settings ( ) 1-21
Cascade Menu ( ) 1-21
Manual Operation ( ) 1-22

ACVMAX PARAMETERS FOR THE SPECIALIST 1-23

List of Status Line Messages 1-23
Appliance codes 1-24
Factory settings and reset values 1-24
ACVMax menu structure 1-25

ACVMAX OPERATING INFORMATION

The ACVMax system control is designed to be flexible yet easy to use. It monitors and controls the appliance to have it operate as efficiently as possible. ACVMax monitors the appliance supply, return and flue gas temperatures and operates the igniter, gas valve and blower. It uses this information to modulate the appliance firing rate to maintain the required setpoint. ACVMax offers many advanced control options, which may be adjusted for various applications to achieve optimum appliance efficiency and operation:

- Two central / space heating (CH) call inputs with separate outdoor curves.
- A Domestic Hot Water (DHW) call input with optional priority.
- System temperature sensing and control with an optional system temperature sensor.
- A cascade function. It allows up to four Prestige Solo boilers to operate together in a single heating system.

The Cascade feature is not applicable to HeatMaster boilers, as a HeatMaster cascade must be controlled by an external controller. Refer to the HeatMaster Installation, Operation and Maintenance manual.

- A Modbus interface for integrating with building management systems.

These advanced features are adjustable in the Installer Menu after entering an access code. Refer to **"Installer Code"** for more details.

CONTROL PANEL DESCRIPTION

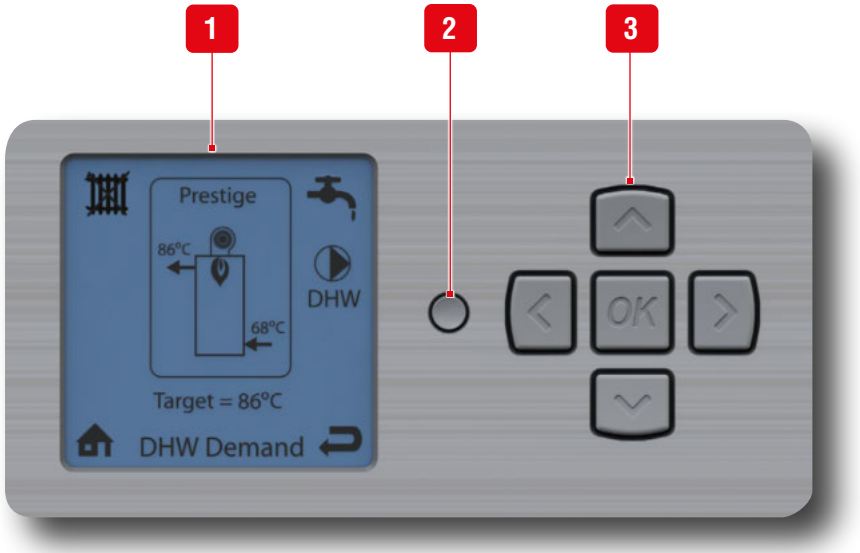

1. **ACVMax LCD Display** - It is the setup interface of the appliance and indicates the parameter values, the error codes and the set-up status of the parameters. It displays a series of screens, each showing information and/or icons. The main icons are detailed on the right.

2. **Installer button** - Allows the installer to access the menus of the ACVMax controller to set up the system.

3. **Arrow keys and OK key -** To browse through the screens of the ACVMax controller, set up the appliance, increase and decrease the displayed values and validate the selections and access the Easy set-up screens. The OK key is also used to RESET the appliance after a blocking (following the instructions on the screen.

Main settings of ACVMAX Display

- **Screen backlight** - it will illuminate when any button is depressed, and remain illuminated for five minutes.
- **Screen contrast** - it can be adjusted at the **Home screen** by pressing and holding the **OK** button, then pressing and holding the **LEFT** button along with the **OK** button. Press the **UP** and **DOWN** button to increase or decrease the contrast while holding the **OK** and **LEFT** buttons depressed. All buttons must be released and the procedure performed again to switch between increasing and decreasing contrast.

Main Icons of ACVMax display

Central Heating - indicates information related to the CH circuit.

DHW - indicates information related to the Domestic Hot Water circuit.

Home - to go back to the main menu screen.

Back - to go back to the previous screen.

Pump - indicates a pump is operating.

Warm weather shutdown - displays on the home screen when the outdoor temperature reaches the Warm Weather Shutdown preset temperature.

HOME PAGE DESCRIPTION

The **appliance type** is indicated at the top of the screen. The type and model are factory preset. This setting can be accessed through the installer menu (Boiler settings > Appliance settings) and modified using an appliance code (e.g. in the case of a gas conversion or an ACVMax board replacement).

Refer to **"Appliance codes"**

The appliance is represented in the centre of the Home Screen. Basic operating information such as supply and return temperatures are displayed as well as current burner status.

Radiator icon: indicates that a central heating call has been received. A small number 1 or 2 indicates which CH calls are active.

A **flame symbol** is displayed when the unit is fired. The flame size changes to indicate the current firing rate.

Basic information. The user can toggle the items using the LEFT and RIGHT keys and view target, Supply, Return, Domestic, Outdoor and System temperatures.

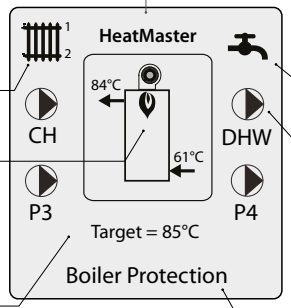

Tap icon: indicates that a DHW call has been received.

Circulator icons: indicate which circulators are currently powered.

Status line : displays the current operating state of the appliance.

See **"List of Status Line Messages"**.

APPLIANCE EASY SETUP (EZ SETUP)

The main parameters of the appliance can be set up using the EZ (easy) setup function of the controller. The EZ setup function allows the user/installer to quickly setup the appliance for immediate operation according to the system configuration. Refer to the appliance "Installation, Operation and Maintenance Instructions".

SELECTING THE LANGUAGE

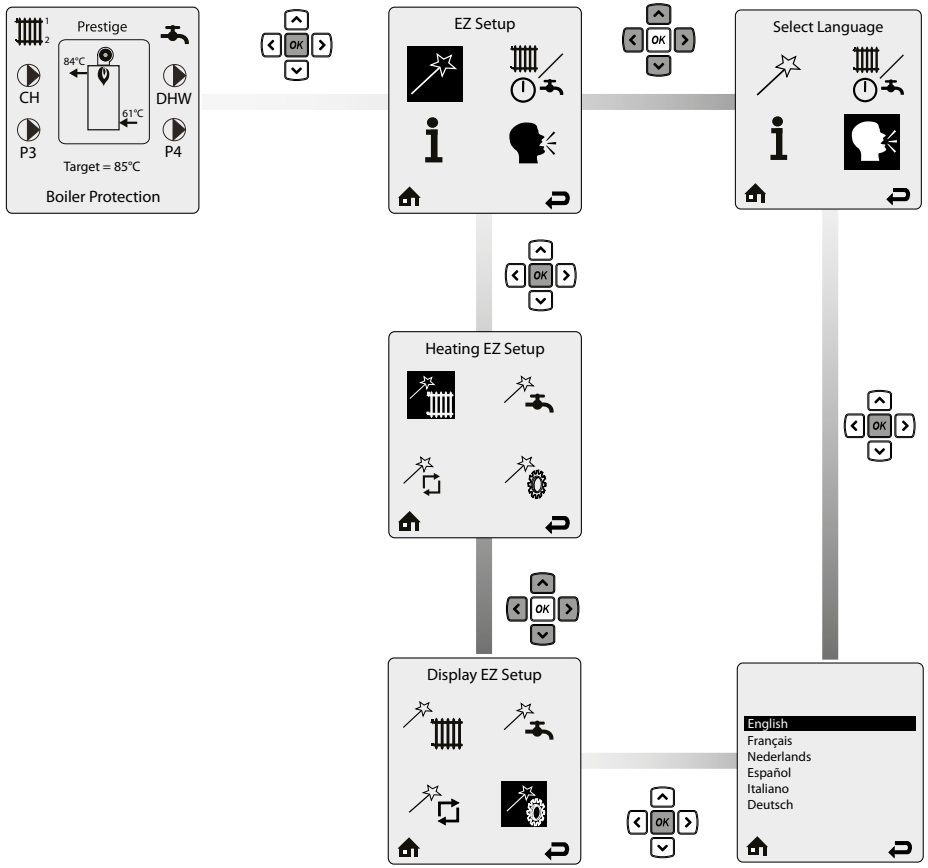

INSTALLER CODE

Through the use of the specific code "**054**", the installer can access various setup screens, in order to define a large set of parameters and adapt the operation of the ACVMax to the system configuration.

To navigate on the screen, use the **UP, DOWN, LEFT** and **RIGHT** keys, then the **OK** key to validate a selection. To increase/decrease values, use the **UP** and **DOWN** keys. or **LEFT** and **RIGHT**, according to the situation.

General remarks

- **Entering the installer access code allows the installer to make adjustments for 30 minutes. After 30 minutes, the access code will need to be entered again to make any adjustments.**
- **If the end user misuses the installer code to access installer-specific parameters and makes changes that cause a system failure, any warranty claim will be void.**

INSTALLER MENU STRUCTURE

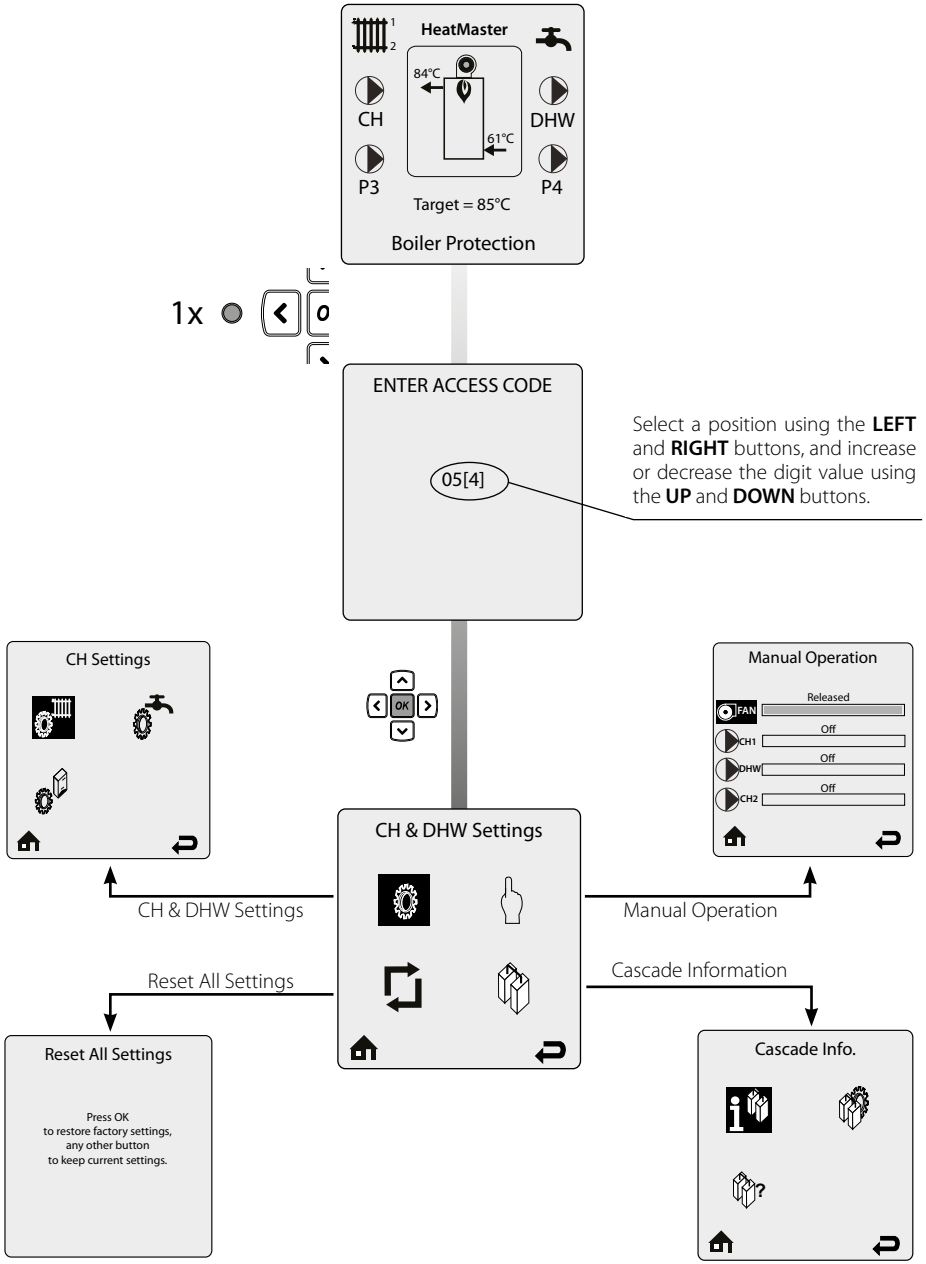

INSTALLER MENU DESCRIPTION

The installer Menu contains the following icons :

1. **CH & DHW Settings** – Allows the installer to adjust the appliances central/space heating and domestic hot water settings for the application. For the detail of the menus, go to **"CH & DHW Settings ( ) -->> CH Settings ( )"**.

2. **Manual Operation** – The burner and circulators can be manually enabled for testing. For a detail of the menus, go to **"Manual Operation ( )"** .

3. **Cascade Settings** – Allows the installer to setup, adjust and monitor the Cascade System. For a detail of the menus, go to **"menus and screens description"** in Volume 3.

3. **Reset All Settings** – Resets all CH, DHW, and Cascade Settings back to the default settings (for the detail of the values, go to **"Factory settings and reset values"**). For a detail of the menus, go to **"Reset all settings ( )"**.

5. **Home** - to go back to the home page.

6. **Back** - to go back to the previous screen.

CH & DHW Settings ( ) -->> CH Settings ( )

"Installer Code"

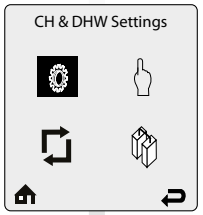

To navigate on the screen, use the **UP**, **DOWN**, **LEFT** and **RIGHT** keys, then the **OK** key to validate a selection. To increase/decrease values, use the **UP** and **DOWN** or **LEFT and RIGHT** keys, according to the situation

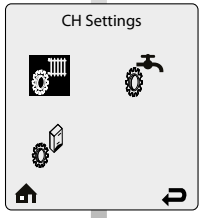

The **Heating Settings** menu contains settings related to central heating operation. Each line contains a CH Setting followed by its current value. Six CH Settings are displayed on the screen at one time.

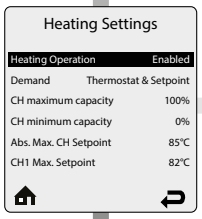

Heating Operation allows the central heating function to be enabled and disabled.

Press the **UP** or **DOWN** buttons to select Enabled or Disabled then press the **OK** button to store the setting.

Enabled - The Appliance will respond to a central heating call.

Disabled - The Appliance will not respond to a central heating call. The heating operation disabled icon ( ) is displayed on the home screen when central heating operation has been disabled.

When heating is disabled the frost protection will still be active.

Default: Enabled

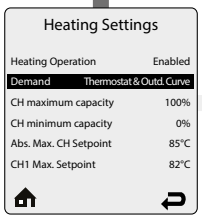

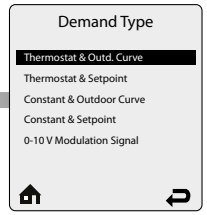

Demand Type allows the installer to select how a CH Demand is generated.

Press the **UP** or **DOWN** buttons to select the CH Demand Type then press the **OK** button to store the setting.

Default: Thermostat and Outd. Curve

See detail of menu on next page.

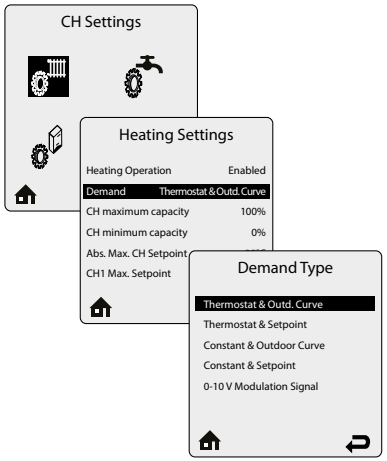

Demand Type screen menu

Thermostat & Outdoor Curve – A central heating call from a dry contact switch will enable the appliance and the setpoint will vary with the outdoor temperature for central heating calls.

Thermostat & Setpoint - A central heating call from a dry contact switch will enable the appliance and the setpoint will be fixed for central heating calls.

Constant & Outd. Curve - The appliance will maintain setpoint and the central heating circulators will be constantly enabled without an external call from a dry contact switch. The central heating circulators will be disabled when the outdoor temperature exceeds the Warm Weather Shutdown Temperature setting. The setpoint will vary with the outdoor temperature for central heating calls.

Constant & Setpoint - The appliance will maintain setpoint and the central heating circulators will be constantly enabled without an external call from a dry contact switch. The central heating circulators will be disabled when the outdoor temperature exceeds the Warm Weather Shutdown Temperature setting. The setpoint will be fixed for central heating calls.

0 - 10V Modulation Signal - This option allows the appliance firing rate to be controlled by an external control system. Based on the control input voltage, the appliance will start to operate for heat demand. The CH temperature is limited by the Absolute maximum temperature.

- 0 – 2V appliance is off.
- 2 – 10 V linear power increase from minimum to maximum output.
- 10 – 2 V linear power decrease from maximum to minimum output.
- 2 – 1 V appliance on minimum capacity.
- 1 - 0 V appliance off.

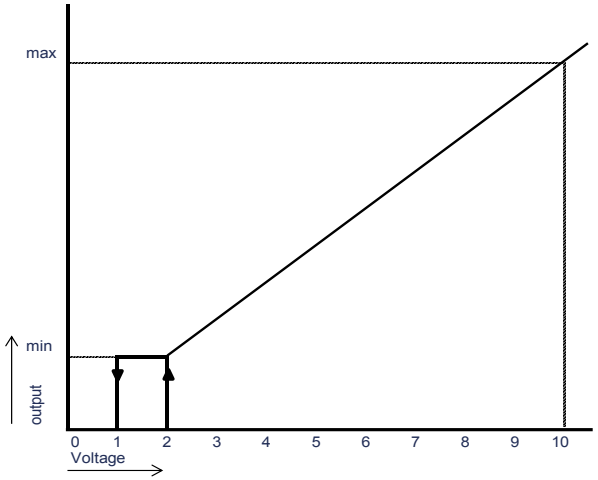

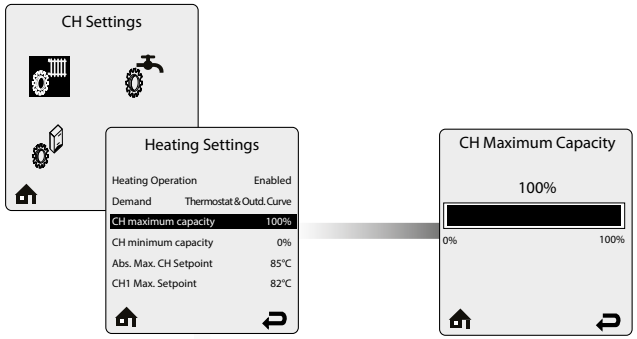

CH Maximum Capacity limits the maximum CH capacity. The appliance capacity can be defined by adjusting this value, 100% means Maximum CH output, 0% means minimum CH output. It is therefore possible to adjust the CH capacity to the installation needs.

Example: when set to 60%, the real appliance capacity is the appliance minimum capacity plus 60% of the difference between the maximum and minimum capacity.

Press the **LEFT** or **RIGHT** buttons to adjust the CH Maximum Capacity, then press the **OK** button to store the setting.

Default: 100%

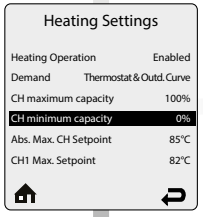

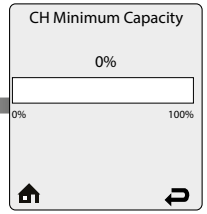

CH Minimum Capacity sets the lowest limit of the CH capacity. The appliance capacity can be defined by adjusting this value and the CH Maximum capacity. It is therefore possible to adjust the CH capacity to the installation needs.

Example: when the CH minimum capacity is set to 20%, the real appliance capacity is the appliance minimum capacity plus 20% of the difference between the maximum and minimum capacity.

Press the **LEFT** or **RIGHT** buttons to adjust the CH Minimum Capacity, then press the **OK** button to store the setting.

Default: 0%

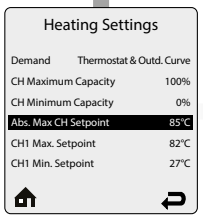

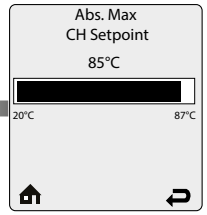

Absolute Max CH Setpoint limits the setpoint during a central heating call. This setting can be used to prevent a user from adjusting the central heating setpoint or outdoor curve above a safe operating temperature in the EZ Setup Menu. A warning screen will be displayed in EZ Setup if the user attempts to raise the setpoint above the Absolute Max CH Setpoint. The Absolute Max CH Setpoint will be displayed on the outdoor curve in EZ Setup if the user selects an outdoor curve which goes above the Absolute Max CH Setpoint.

Press the **LEFT** or **RIGHT** buttons to adjust the Absolute Max CH Setpoint then press the **OK** button to store the setting.

Default: 85°C

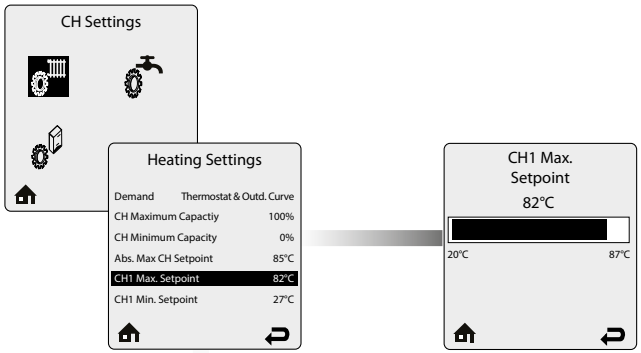

CH1 Max. Setpoint is the maximum setpoint for a CH1 heating call when an Outdoor Curve option is chosen in Demand Type. CH1 Maximum Setpoint is the fixed setpoint for a CH1 heating call when a Setpoint option is chosen in Demand Type.

Press the **LEFT** or **RIGHT** buttons to adjust the CH1 Maximum Setpoint then press the **OK** button to store the setting.

Default: 82°C

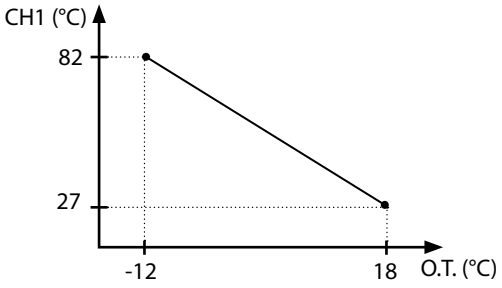

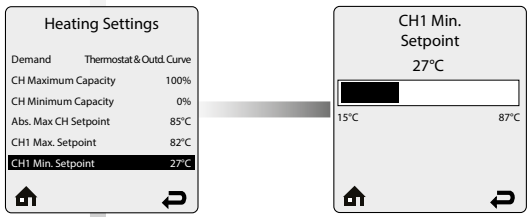

CH1 Min. Setpoint is the minimum setpoint for a CH1 heating call when an Outdoor Curve option is chosen in Demand Type. This setting is not applicable when a Setpoint option is chosen in Demand Type.

Press the **LEFT** or **RIGHT** buttons to adjust the CH1 Minimum Setpoint then press the **OK** button to store the setting.

Default: 27°C

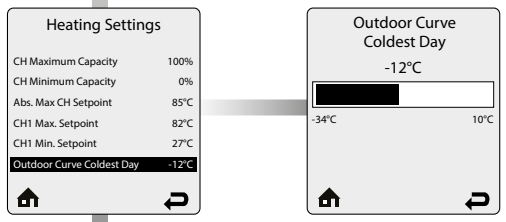

Outdoor Curve Coldest Day is the coldest outdoor design temperature of the heating system when an Outdoor Curve option is chosen in Demand Type. This setting is not applicable when a Setpoint option is chosen in Demand Type.

Press the **LEFT** or **RIGHT** buttons to adjust the Outdoor Curve Coldest Day then press the **OK** button to store the setting.

Default: -12°C

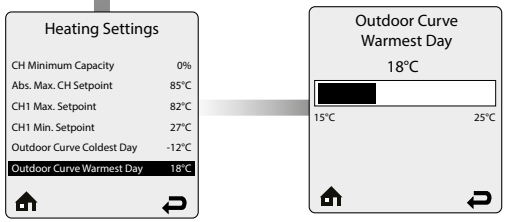

Outdoor Curve Warmest Day is the warmest outdoor design temperature of the heating system when an Outdoor Curve option is chosen in Demand Type. This setting is not applicable when a Setpoint option is chosen in Demand Type.

Press the **LEFT** or **RIGHT** buttons to adjust the Outdoor Curve Warmest Day then press the **OK** button to store the setting.

Default: 18°C

The temperatures of Outdoor Curve Coldest Day and Outdoor Curve Warmest Day are identical to those of CH1.

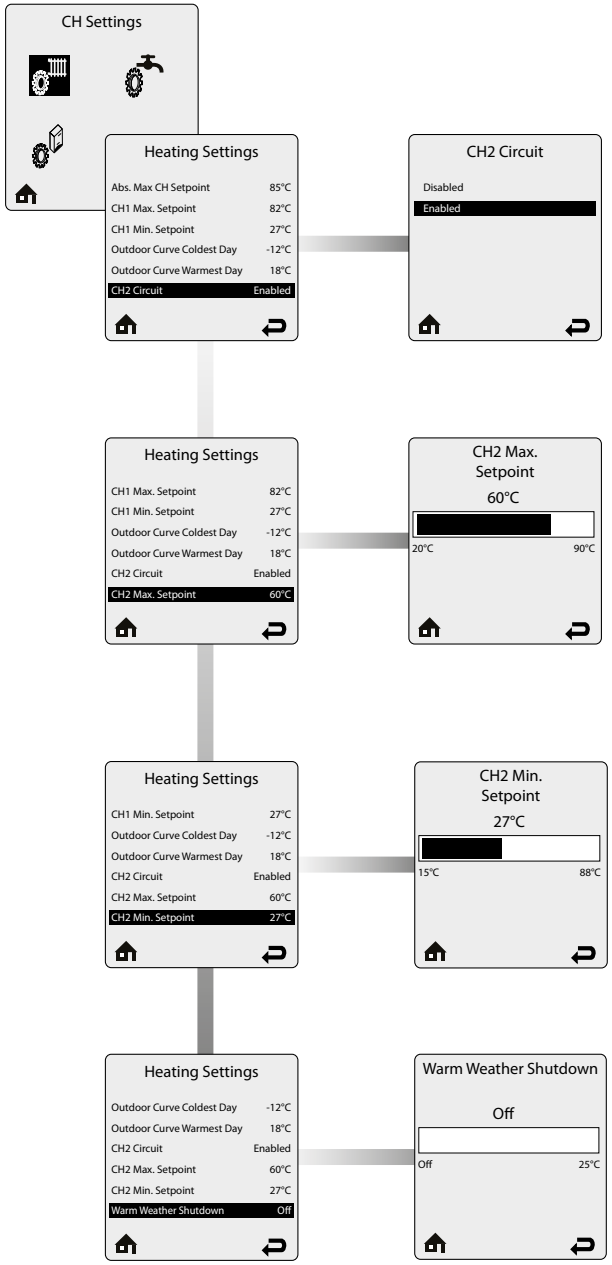

CH2 Circuit allows the CH2 heating call to be enabled and disabled.

Press the **UP** or **DOWN** buttons to select Enabled or Disabled then press the **OK** button to store the setting.

Enabled – The appliance will respond to a CH2 heating call
Disabled – The appliance will not respond to a CH2 heating call

Default: Enabled

CH2 Maximum Setpoint is the maximum setpoint for a CH2 heating call when an Outdoor Curve option is chosen in Demand Type. CH2 Maximum Setpoint is the fixed setpoint for a CH2 heating call when a Setpoint option is chosen in Demand Type.

Press the **LEFT** or **RIGHT** buttons to adjust the CH2 Maximum Setpoint then press the **OK** button to store the setting.

Default: 60°C

CH2 Minimum Setpoint is the minimum setpoint for a CH2 heating call when an Outdoor Curve option is chosen in Demand Type. This setting is not applicable when a Setpoint option is chosen in Demand Type.

Press the **LEFT** or **RIGHT** buttons to adjust the CH2 Minimum Setpoint then press the **OK** button to store the setting.

Default: 27°C

Warm Weather Shutdown allows to enter an optional outdoor temperature at which to disable the central heating function. The Appliance will continue to respond to a domestic hot water call or a 0- 10V Modulation Signal when the outdoor temperature exceeds the Warm Weather Shutdown Temperature setting.

Press the **LEFT** or **RIGHT** buttons to adjust the Warm Weather Shutdown Temperature then press the **OK** button to store the setting and complete the Heating setting.

The Warm Weather Shutdown icon ( ) is displayed on the home screen when the outdoor temperature reaches the Warm Weather Shutdown Temperature.

Default: OFF.

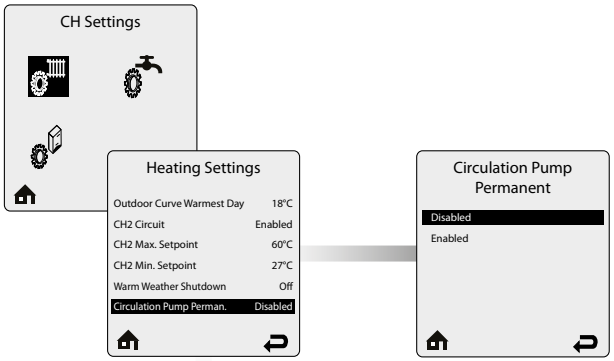

Circulation Pump Permanent allows the central heating circulators to be constantly enabled even without a central heating call. A domestic hot water call will cause the circulators to be disabled during the domestic call as long as DHW Priority is enabled.

Press the **UP** or **DOWN** buttons to select Enabled or Disabled then press the OK button to store the setting.

- **Enabled** – The central heating circulators will be enabled for constant circulation without a central heating call.
- **Disabled** – The central heating circulators will only be enabled during a central heating call.

Default: Disabled

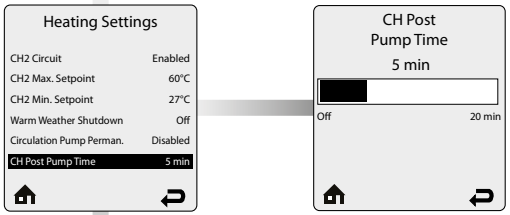

CH Post Pump Time sets how long the central heating circulators will continue to operate at the completion of a heating call. Refer to the relevant "Pumps" section of Volume 2, to know which pumps will continue to operate. Any call during the CH Post Pump Time will be ignored until the post pump has completed. The CH Post Pump Time feature allows the heat remaining in the appliance at the completion of a call to be sent to the heating system, which will improve the overall efficiency of the system.

Press the **LEFT** or **RIGHT** buttons to adjust the CH Post Pump Time then press the **OK** button to store the setting.

Default: 5 min

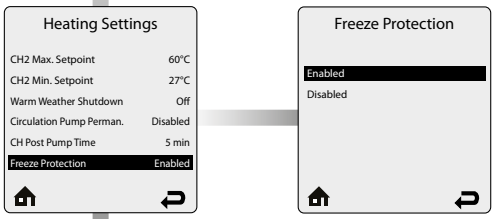

The **Freeze Protection** menu allows the feature to be enabled and disabled. The built-in frost protection mechanism activates the system pumps as soon as the flow temperature [NTC1 probe] drops below 7°C. As soon as the flow temperature is at 5°C, the burner starts up until the flow temperature rises above 15°C. The pumps continue to run for around 10 minutes.

Press the **UP** or **DOWN** buttons to select Enabled or Disabled then press the **OK** button to store the setting.

- **Enabled** – The Frost Protection feature protects the installation from freezing at a predetermined system flow temperature.
- **Disabled** – The Frost Protection feature is disabled. Only the pumps operate.

Default: Enabled

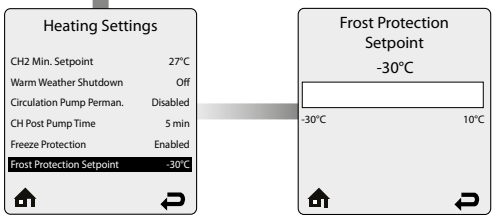

Frost Protection Setpoint allows to define the outside air temperature at which the anti-freeze function is activated (only available if an outdoor temperature sensor is connected). The pumps are activated when the outside temperature drops below the threshold defined in this menu.

Press the **LEFT** or **RIGHT** buttons to adjust the Freeze temperature Setpoint then press the **OK** button to store the setting.

In order to enable the protection of the whole system against freezing, all the valves of the radiators and the convectors should be completely open.

Default: -30°C

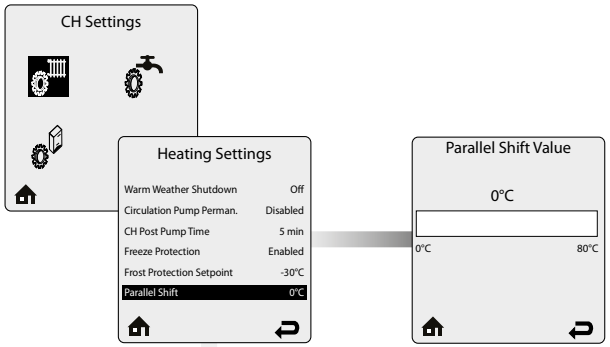

Parallel Shift allows the CH setpoint to be externally adjusted when a Constant option is chosen in Demand Type. When a Constant option is chosen in Demand Type, continuous CH1 and CH2 heating calls are generated. Simultaneous CH1 and CH2 calls will result in the Appliance operating at the highest CH1 or CH2 setpoint. The CH1 or CH2 Thermostat terminals with the highest setpoint will be used to adjust the setpoint. If the Thermostat terminals with the highest setpoint are open, the CH setpoint will decrease by the Parallel Shift Value. If the Thermostat terminals with the highest setpoint are closed, the CH setpoint will return to the highest CH1 or CH2 setpoint

Press the **LEFT** or **RIGHT** buttons to adjust the Parallel Shift Value then press the **OK** button to store the setting.

Default: 0°C

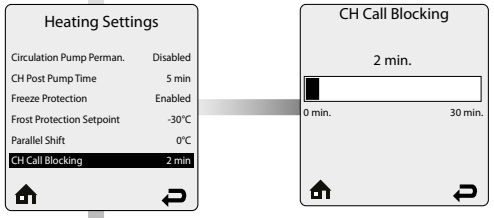

CH Call Blocking sets the minimum time between burner firings for central heating calls. At the completion of a burner firing, the CH Call Blocking time will begin. The burner will not fire again until after the CH Call Blocking time has elapsed. The CH Call Blocking time only prevents the burner from firing, the central heating circulators will respond to a central heating call. This blocking time has no affect on domestic hot water calls. The CH Call Blocking feature prevents short cycling of the burner and extends the life of the burner components.

Press the **LEFT** or **RIGHT** buttons to adjust the Parallel Shift Value then press the **OK** button to store the setting.

Default: 2 min.

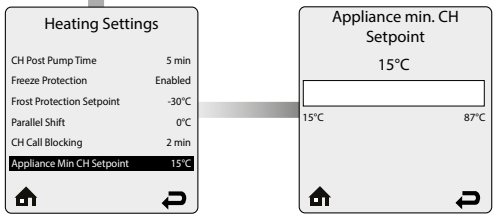

Appliance min CH Setpoint - The minimum setpoint can be reduced when the heating system is needing it to defrost installations.

Press the **LEFT** or **RIGHT** buttons to adjust the Appliance min CH Setpoint value then press the **OK** button to store the setting.

Default for Prestige: 15°C.
Default for HeatMaster/WaterMaster: 27°C

CH & DHW Settings ( )-->> DHW Setting ( )

"Installer Code"

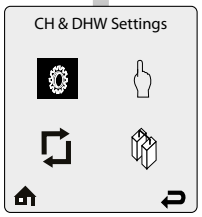

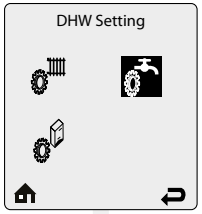

To navigate on the screen, use the **UP**, **DOWN**, **LEFT** and **RIGHT** keys, then the **OK** key to validate a selection. To increase/decrease values, use the **UP** and **DOWN** keys, or **LEFT** and **RIGHT**, according to the situation

The **DHW Setting menu** contains settings related to domestic hot water operation. Each line contains a DHW Setting followed by its current value. Six DHW Settings are displayed on the screen at one time.

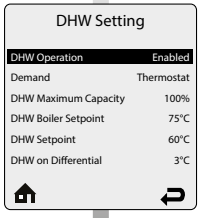

DHW Operation allows the domestic hot water function to be enabled and disabled.

Press the **UP** or **DOWN** buttons to select Enabled or Disabled then press the **OK** button to store the setting.

- **Enabled** - The Appliance will respond to a domestic hot water call.
- **Disabled** - The Appliance will not respond to a domestic hot water call. The domestic hot water operation disabled icon ( )is displayed on the home screen when domestic hot water operation has been disabled.

DHW Operation default: Enabled

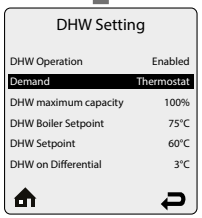

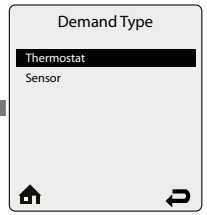

Demand Type allows the installer to select the type of device which will generate a domestic hot water call.

Press the **UP** or **DOWN** buttons to select the DHW Demand Type then press the **OK** button to store the setting.

The DHW Demand options are:

- **Thermostat** - A domestic hot water call from an aquastat or dry contact switch will enable the Appliance with a fixed setpoint for a domestic hot water call.
- **Sensor** - This option requires the use of an Indirect Water Heater Sensor. The Appliance will monitor the DHW storage temperature and generate a domestic hot water call when the temperature drops below the DHW Storage Setpoint - DHW On Differential.

DHW Maximum Capacity limits the maximum DHW capacity. The appliance capacity can be defined by adjusting this value, 100% means Maximum DHW output, 0% means minimum DHW output. It is therefore possible to adjust the DHW capacity to the installation needs.

Example: when set to 60%, the real appliance capacity is the appliance minimum capacity plus 60% of the difference between the maximum and minimum capacity.

Press the **LEFT** or **RIGHT** buttons to adjust the DHW Maximum Capacity, then press the **OK** button to store the setting.

Default: 100%

DHW Boiler Setpoint is the fixed appliance setpoint temperature during a domestic hot water call when the Thermostat option is chosen in Demand Type.

Press the **LEFT** or **RIGHT** buttons to adjust the DHW Boiler Setpoint then press the **OK** button to store the setting.

Default: 75°C

DHW Setpoint is the domestic hot water storage setpoint temperature when the Sensor option is chosen in Demand Type.

Press the **LEFT** or **RIGHT** buttons to adjust the DHW Setpoint then press the **OK** button to store the setting.

Default: 60°C

The appliance setpoint is automatically set to the DHW Setpoint + DHW Storage adder when the Sensor option is chosen in DHW demand

DHW On Differential sets how far the DHW storage temperature must fall below the DHW Storage Setpoint to create a domestic hot water call when the Sensor option is chosen in Demand Type. The domestic hot water call will end when the DHW storage temperature rises above the DHW Storage Setpoint.

Press the **LEFT** or **RIGHT** buttons to adjust the DHW On Differential then press the **OK** button to store the setting.

Default: 3°C

The DHW on differential setting greatly affects the production of domestic hot water. A low setting could result in a rapid response to a domestic hot water call resulting in a potential scald hazard. It is strongly recommended that the installer use a thermostatic mixing valve on the hot water outlet of the Indirect Water Heater. Failure to comply could result in severe personal injury, death, or substantial property damage.

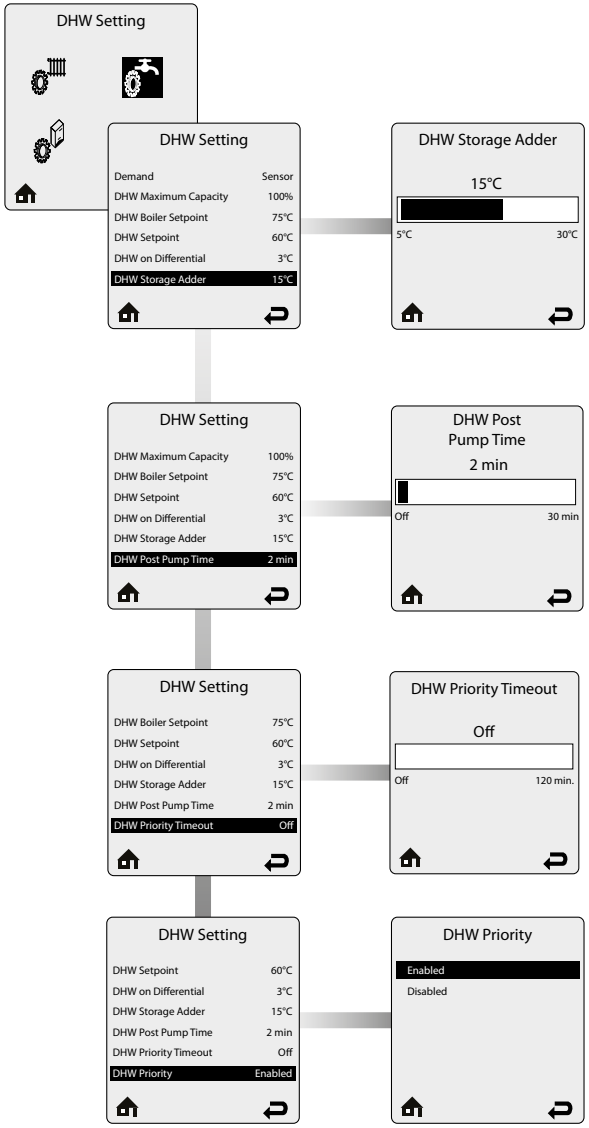

DHW Storage Adder is used to compute the appliance setpoint when the Sensor option is chosen in Demand Type. The appliance setpoint will be DHW Storage Setpoint + DHW Storage Adder for a domestic hot water call.

Press the **LEFT** or **RIGHT** buttons to adjust the DHW Storage Adder then press the **OK** button to store the setting.

Default: 15°C

DHW Post Pump Time sets how long the domestic hot water circulator will continue to operate at the completion of a domestic hot water call. Any call during the DHW Post Pump Time will be ignored until the post pump has completed. The DHW Post Pump feature allows the heat remaining in the appliance at the completion of a call to be sent to the Indirect Water Heater, which will improve the overall efficiency of the system.

Press the **LEFT** or **RIGHT** buttons to adjust the DHW Post Pump Time then press the **OK** button to store the setting.

Default : 1 min.

DHW Priority Timeout allows the installer to enter an optional time limit that a domestic hot water call has priority over a central heating call when DHW Priority is set to Enabled.

Press the **LEFT** or **RIGHT** buttons to adjust the DHW Priority Timeout then press the **OK** button to store the setting.

Default: Off

DHW Priority allows the domestic hot water priority function to be enabled and disabled.

Press the **UP** or **DOWN** buttons to select Enabled or Disabled then press the **OK** button to store the setting.

- **Enabled**- Domestic hot water calls will have priority over a central heating call. The appliance setpoint will be set to the domestic hot water setpoint during a domestic hot water call. The DHW circulator will be enabled and the heating circulators will be disabled during a domestic hot water call.
- **Disabled** - Domestic hot water calls will not have priority over a central heating call. The appliance setpoint will be set to the domestic hot water setpoint when only a domestic hot water call is present. The appliance setpoint will be set to the highest setpoint when simultaneous domestic hot water and central heating calls are present. The DHW circulator will be enabled during a domestic hot water call. The heating circulators will be enabled during a central heating call.

Default: Enabled

Simultaneous domestic hot water and central heating calls will result in the Appliance operating at the highest target temperature when DHW Priority is set to disabled. The use of a mixing device on the lower temperature zones may be required to protect the lower temperature zones from damage.

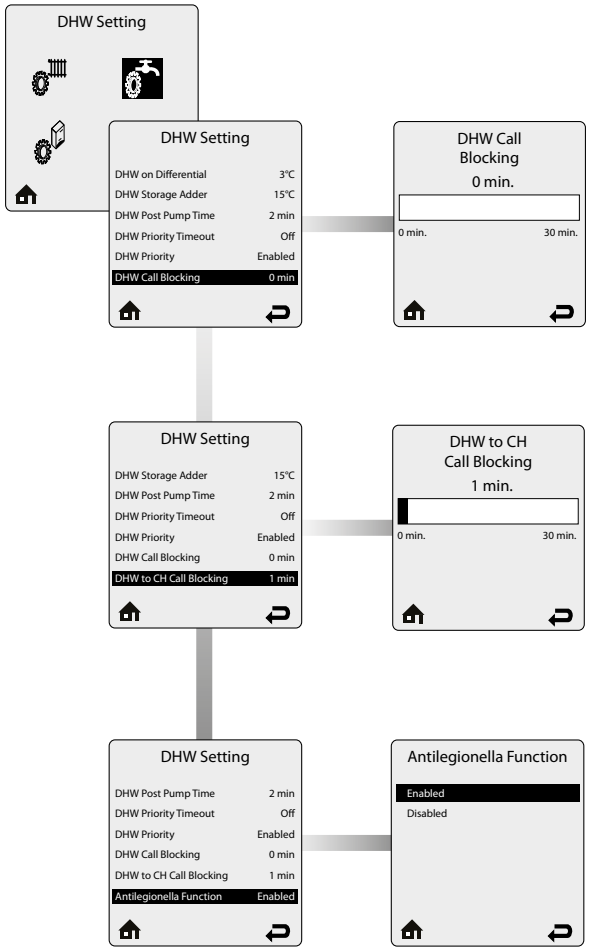

DHW Call Blocking sets the minimum time between burner firings for domestic hot water calls. At the completion of a burner firing, the DHW Call Blocking time will begin. The burner will not fire again until after the DHW Call Blocking time has elapsed. The DHW Call Blocking time only prevents the burner from firing, the domestic hot water circulator will respond to a domestic hot water call. This blocking time has no affect on central heating calls. The DHW Call Blocking feature prevents short cycling of the burner and extends the life of the burner components.

Press the **LEFT** or **RIGHT** buttons to adjust the DHW Call Blocking time then press the **OK** button to store the setting.

Default: 0 min.

DHW To CH Call Blocking sets the minimum time between a DHW burner firing and a CH burner firing. At the completion of a DHW burner firing, the DHW to CH Call Blocking time will begin. The burner will not fire again for a central heating call until after the DHW To CH Call Blocking time has elapsed. This feature only prevents the burner from firing, the central heating circulators will respond to a central heating call. This blocking time has no affect on domestic hot water calls. The DHW To CH Call Blocking feature prevents the burner from firing when switching from a domestic hot water call to a central heating call. This allows the remaining heat in the heat exchanger to be dissipated and potentially satisfy the central heating call.

Press the **LEFT** or **RIGHT** buttons to adjust the DHW To CH Call Blocking time then press the **OK** button to store the setting.

Default: 1 min.

The **Antilegionella Function** ensures that an Indirect Water Heater is heated at least once per week to prevent the growth of Legionella bacteria.

Press the **UP** or **DOWN** buttons to select Enabled or Disabled then press the **OK** button to store the setting.

- **Enabled**- When the **Thermostat** option is chosen in Demand Type, a domestic hot water call is generated for 15 minutes once per week to heat the Indirect Water Heater.

  When the **Sensor** option is chosen in Demand Type, a domestic hot water call is generated until the DHW storage temperature reaches 60°C once per week. When the Sensor option is chosen in Demand Type, the weekly timer is reset whenever the DHW storage temperature reaches 60°C to prevent unnecessary firings. This function will be active even if DHW Operation has been set to Disabled. The appliance setpoint is at 80°C during the antilegionella cycle.

- **Disabled** - The Appliance will only fire in DHW mode when a domestic hot water call is received.

Default for Prestige Excellence/HeatMaster/WaterMaster: Enabled

Default for Prestige Solo: Disabled

The antilegionella function should only be enabled when an Indirect Water Heater is installed. Enabling the antilegionella function without an Indirect Water Heater will result in the Appliance firing once per week in DHW mode. This could cause a Manual Reset Hard Lockout of the appliance.

The antilegionella function is most effective when the Sensor option is chosen in DHW demand. The use of an Indirect Water Heater Sensor ensures that the domestic hot water is heated to 60°c at least once per week.

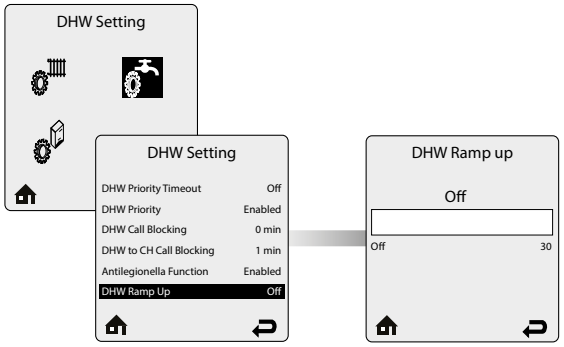

The **DHW Ramp up** function limits the CH temperature rise of the CH water during the startup of the appliance in DHW mode. The parameter is expressed in °C/min.

Press the **LEFT** or **RIGHT** buttons to adjust the DHW Ramp up value then press the **OK** button to store the setting.

Default: Off

CH & DHW Settings -->> Boiler Settings

"Installer Code"

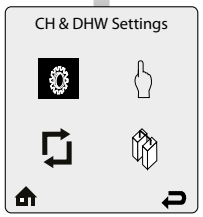

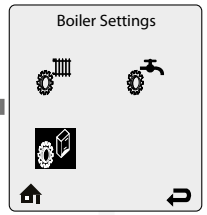

To navigate on the screen, use the **UP**, **DOWN**, **LEFT** and **RIGHT** keys, then the **OK** key to validate a selection. To increase/decrease values, use the **UP** and **DOWN** keys. or **LEFT** and **RIGHT**, according to the situation

The **Boiler Settings** menu contains settings related to appliance operation. Each line contains an appliance setting followed by its current value. Seven settings are available.

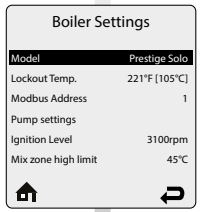

The **Model** menu indicates the model and possibly type of appliance for which the system is set up.

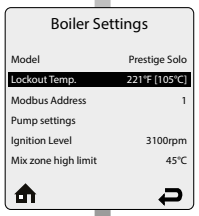

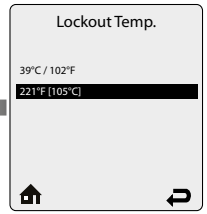

The **Lockout Temp.** setting allows testing of the overheat thermostat function at a reduced temperature. It temporarily decreases the overheat temperature of the appliance to 39°C which allows a safe demonstration of the function.

Press the **UP** or **DOWN** buttons to scroll through the settings, then on **OK** to validate your selection.

Default: 105°C

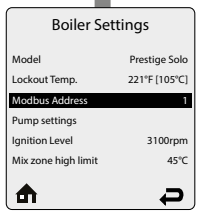

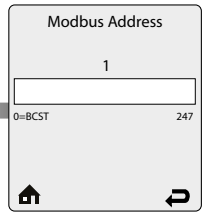

This parameter sets the **Modbus address** of the appliance in a Modbus based communication system.

Press the **LEFT** or **RIGHT** buttons to adjust the settings, then on **OK** to validate your selection.

Default: 1

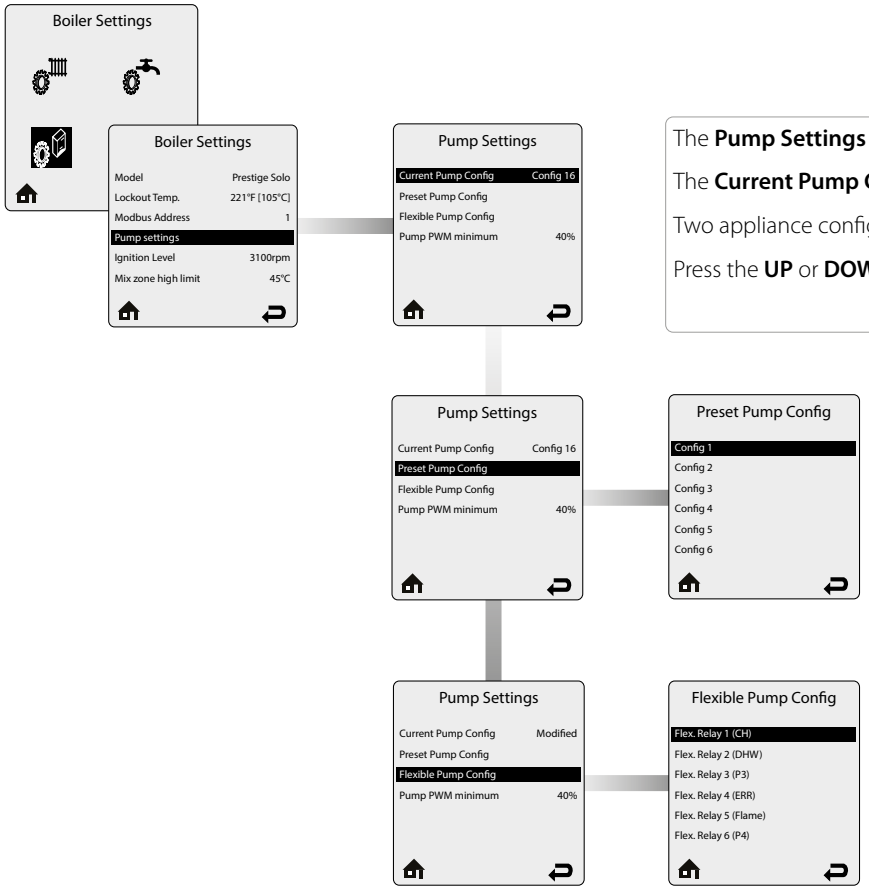

The **Pump Settings** menu allows to choose the right pump configuration to the chosen hydraulic configuration.

The **Current Pump Config** indicates which configuration is currently selected for the appliance.

Two appliance configuration modes are available : a preset configuration mode and a flexible configuration mode.

Press the **UP** or **DOWN** buttons to scroll through the options, then on **OK** to validate your selection.

In the **Preset Pump Config.** (preferred selection) you can choose from a number of preset pump configurations. Only the configurations usable with a certain model/type of appliance will appear in the list. The configurations are detailed in Volume 2, **"User's Guide"**. Each configuration is detailed through one or several hydraulic diagrams, a table indicating the electrical connections and a list of the parameters to be defined in ACVMax.

Press the **UP** or **DOWN** buttons to scroll through the settings, then on **OK** to validate your selection.

The **Flexible Pump Config.** menu allows to customize the pump configuration to the chosen hydraulic configuration. Only select this option when the preset configurations do not offer you a solution. In this menu you have to choose per relay for which heat demand / function it will be activated. The relays are allocated as follows by default (see picture below for physical location on the optional terminal blocks) :

Flex. Relay 1 ..... CH
Flex. Relay 2 ..... DHW
Flex. Relay 3 ..... P3
Flex. Relay 4 ..... ERR
Flex. Relay 5 ..... FL
Flex. Relay 6 ..... P4

Press the **UP** or **DOWN** buttons to scroll through the settings, then on **OK** to validate your selection.

The use of the Flexible Pump Config. menu is not possible for the Solo/ Excellence (3 way valve).

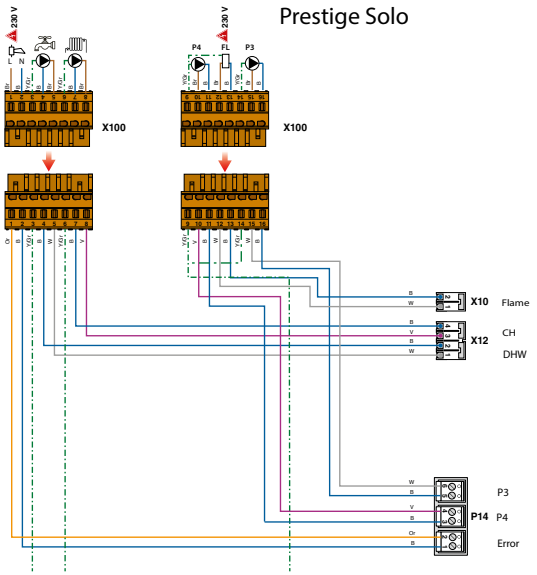

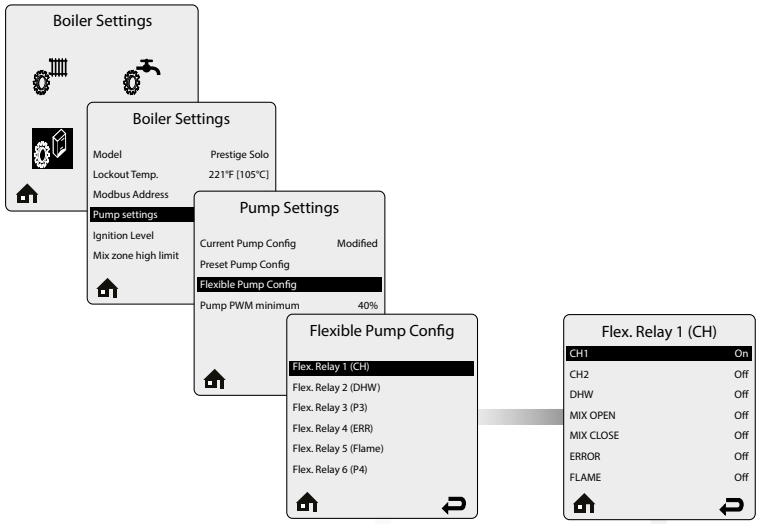

Each relay function has several options. Activation will happen when one of the following options has been chosen: **CH1, CH2, DHW, MIX OPEN, MIX CLOSE, ERROR, FLAME.**

More than one action can be chosen for one relay (one relay can become active for CH1 , CH2 and DHW demand when needed.)

Press the **UP** or **DOWN** buttons to scroll through the settings, then on **OK** to toggle between the On/Off status of each relay. Then go to the next line, until you reach the last line.

- When selecting **CH 1**, the relay is activated at CH 1 demand.
- When selecting **CH 2**, the relay is activated at CH 2 demand.
- When selecting **DHW**, the relay is activated at DHW demand.
- When selecting **Mix Open**, the Mixing valve open input is activated. Provided there is a mixing valve in the hydraulic circuit, runtime is assumed to be 120 sec.
- When selecting **Mix Close**, the Mixing valve close input is activated. Provided there is a mixing valve in the hydraulic circuit, runtime is assumed to be 120 sec.
- When selecting **ERROR**, the relay is activated on error.
- When selecting **FLAME**, the relay is activated when appliance is running and a flame signal has been detected.

By pushing the RIGHT button then OK, you go back to the previous screen, but THE CHANGED VALUES ARE NOT STORED in the memory (Quick escape route).
<u>To save your changes</u>, make sure to scroll down to the last line of the screen and to select Save & Exit. Then press on OK to activate the function.

Press on **OK** to activate **Save & Exit**. This will ensure that the changed data are stored in the appliance.

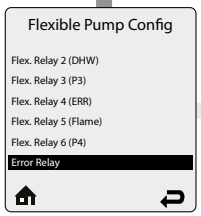

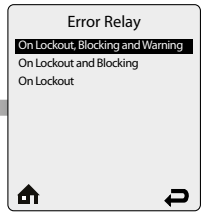

There are three possible selections to activate the **Error Relay** (alarm) contact:

- **On Lockout, Blocking and Warning**: the error relay is activated at a non-volatile lock-out (e.g. CH Flow NTC defect), at a blocking error (self-resetting errors) (e.g. Gas-pressure switch not closed), or at a warning (e.g. low water pressure warning).
- **On Lock-out and blocking**: the error relay is activated at a non-volatile lock-out or a blocking error.
- **On Lockout**: the error relay is activated at a non-volatile lock-out only.

The selection depends on the alarm feedback requirement from the customer.

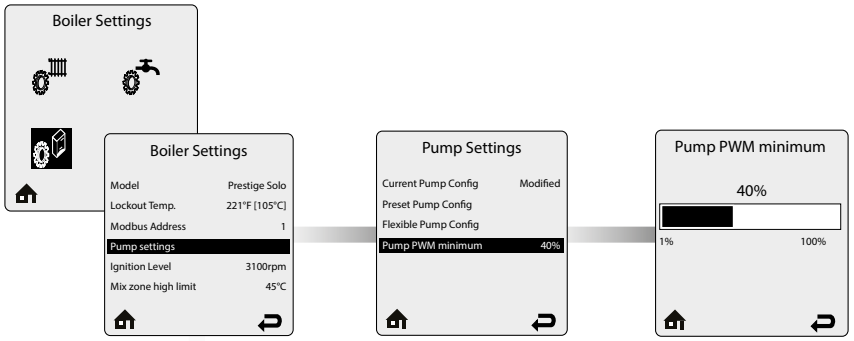

The **Pump PWM minimum** function allows to adjust the minimum pump setting if the flow in the appliance / system is insufficient at minimum appliance rate.

Press the **LEFT** or **RIGHT** buttons to increase/decrease the value, then on **OK** to validate your selection.

This function is not available for the HeatMaster 201.

Default: 40%

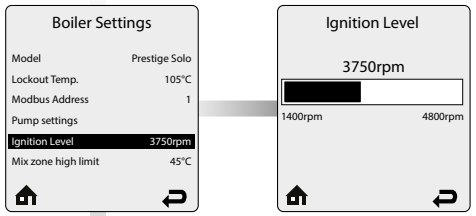

The **Ignition Level** parameter allows to change the fan start speed of the appliance.

Press the **LEFT** or **RIGHT** buttons to adjust the settings, then on **OK** to validate your selection.

Default: See table below for the fan speed applicable to each appliance/gas combination

Prestige	Natural Gas (G20)	Propane (G31)
24 Solo	3000 rpm	3000 rpm
24 Excellence	3000 rpm	3000 rpm
32 Solo	3500 rpm	3000 rpm
32 Excellence	3500 rpm	3000 rpm
42 Solo	3800 rpm	3800 rpm
50 Solo	3300 rpm	3300 rpm
75 Solo	3700 rpm	3700 rpm
100 Solo	2600 rpm	2600 rpm
120 Solo	2600 rpm	2600 rpm
HeatMaster / WaterMaster		
HM 25 C / HM 25 TC / WM 25	3750 rpm	3750 rpm
HM 35 TC / WM 35	3750 rpm	3750 rpm
HM 45 TC / WM 45	3750 rpm	3750 rpm
HM 70 TC / WM 70	3750 rpm	3750 rpm
HM 85 TC / WM 85	3750 rpm	3750 rpm
HM 120 TC / WM 120	3850 rpm	3850 rpm
HM 201	3700 rpm	—

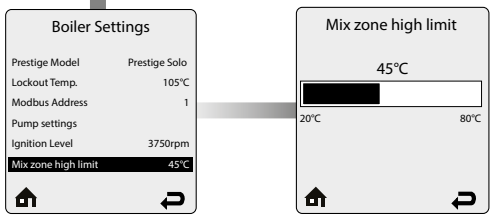

The **Mix zone high limit** setting allows to limit the maximum temperature in the mixed circuit. The function works like an Overheat Cut-off Activation of the limit and will cause the appliance to go in fault state (lockout). This setting allows to change the limit temperature for the mixed circuit.

Be aware that for Floor Heating systems this temperature may NOT be adjusted. A higher temperature setting may damage your floor heating circuit

Press the **LEFT** or **RIGHT** button to decrease/increase the temperature value, then on **OK** to validate your selection.

Default: 45°C

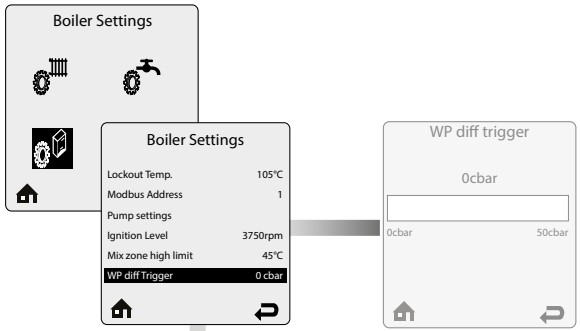

Although the function and the screen are displayed, this function is not in use. Any change made to the value will not affect the operation of the appliance

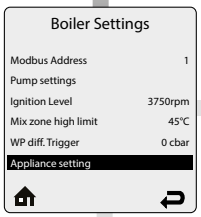

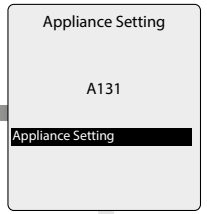

The **Appliance Setting** allows to change the appliance type and model using a specific code. The appliance type and model are factory pre-set for the appliance you have received. This means that parameters are already set for the appliance, and the appliance type **MAY NOT** be changed, unless a gas conversion is made to the appliance or the ACVMax mainboard was replaced.

If the appliance type needs to be changed, please refer to **"Appliance codes"** to know which code to use.

Press the **UP** or **DOWN** buttons to decrease/increase the value (from 0 to 9, then A to Z), then on the **LEFT** or **RIGHT** button to change position.

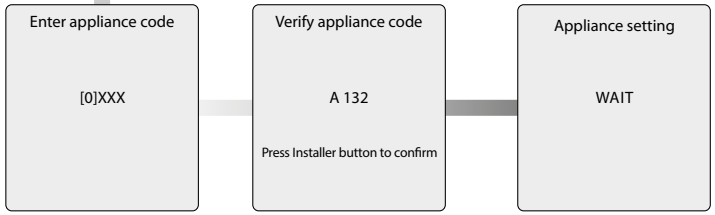

Once the code has been changed, please confirm the change by pressing **OK**, then the installer button or **UP, DOWN, LEFT** or **RIGHT** keys to go back to the previous screen and change the code.

After pressing the Installer button is pressed, the software will process the change, then return to the Main screen.

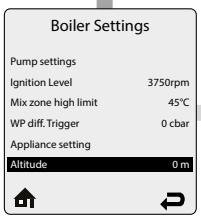

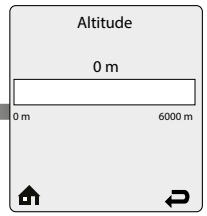

The **Altitude** parameter allows to define the altitude at which your system is installed and compensate for the possible change in air density when at higher altitude.

Press the **LEFT** or **RIGHT** buttons to adjust the settings, then on **OK** to validate your selection.

Default: 0 m.

Reset all settings ( )

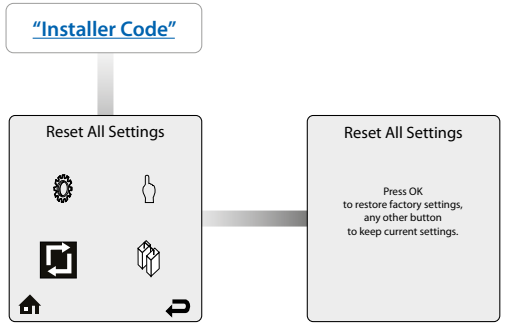

Reset All Settings allows the installer to reset all CH, DHW, and Cascade settings back to the default values (Refer to "Factory settings and reset values" for the default settings).

Follow the on-screen instructions to reset all settings back to the factory default values.

Cascade Menu ( )

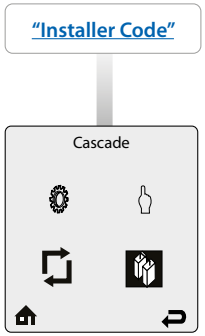

Refer to "VOLUME 1 - ACVMax Menus and functions"

Manual Operation ( )

"Installer Code"

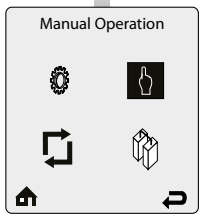

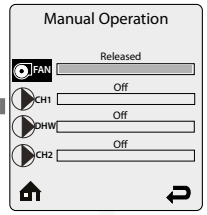

FAN - Press the **OK** button while the FAN icon is highlighted to manually fire the burner and power the CH (1) circulator.

Press the **LEFT** and **RIGHT** buttons to adjust the firing rate from 0% (Low Fire) to 100% (High Fire).

Hold down the **LEFT** or **RIGHT** buttons to rapidly increase or decrease the firing rate.

Press the **OK** button again while the FAN icon is highlighted to shutdown the burner when finished.

General remark

To ensure the operation of the heating system, make sure to switch on one of the pumps.

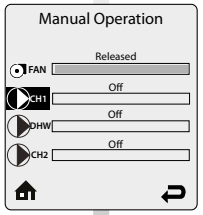

CH1 - Press the **OK** button while the CH1 icon is highlighted to manually power the CH 1 circulator(s) as in CH demand.

Press the **OK** button again while the CH1 icon is highlighted to shutdown the CH 1 circulator(s).

The auxiliary Appliance circulator is also powered when the CH 1 circulator is manually enabled.

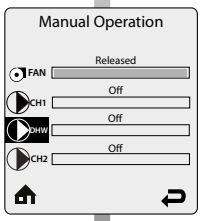

DHW - Press the **OK** button while the DHW icon is highlighted to manually power the DHW circulator(s) as in DHW demand.

Press the **OK** button again while the DHW icon is highlighted to shutdown the DHW circulator(s).

The auxiliary Appliance circulator is also powered when the DHW circulator is manually enabled.

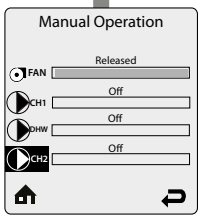

CH2 - Press the **OK** button while the CH2 icon is highlighted to manually power the CH2 circulator(s) as in CH demand.

Press the **OK** button again while the CH2 icon is highlighted to shutdown the CH2 circulator(s).

LIST OF STATUS LINE MESSAGES

Status Line Message	Description
Standby	Indicates that the Appliance is ready to respond when a demand is received.
CH Demand	A central heating call has been received.
DHW Demand	A domestic hot water call has been received.
CH / DHW Demand	Central heating and domestic hot water calls are being received simultaneously. Both calls are being satisfied simultaneously because domestic hot water priority has been disabled.
DHW Priority	Central heating and domestic hot water calls are being received simultaneously. Domestic hot water call is being satisfied first because it has priority over central heating calls.
Priority Timeout	Central heating and domestic hot water calls are being received simultaneously. The domestic hot water priority time limit has been exceeded. Priority will now switch back and forth between central heating and domestic hot water calls until one call is satisfied.
External Demand	An external modulation call has been received.
Slave Operation	The Prestige is a slave in a cascade system.
Manual Operation	The burner or circulators have manually been enabled in the Installer Menu.
CH Burner Delay	The burner will not fire until the call blocking time has elapsed.
DHW Burner Delay	The burner will not fire until the call blocking time has elapsed.
CH Setpoint Reached	The burner is not fired because the supply/system water temperature exceeds the setpoint. The central heating circulator continues to operate and the burner will fire again once the supply/system water temperature drops below the setpoint.
DHW Setpoint Reached	The burner is not fired because the supply/system water temperature exceeds the setpoint. The domestic circulator continues to operate and the burner will fire again once the supply/system water temperature drops below the setpoint.
CH Post Pump	The central heating circulator is running to remove heat from the Appliance at the completion of a call.
DHW Post Pump	The domestic hot water circulator is running to remove heat from the Appliance at the completion of a call.
Freeze Protection	Freeze protection will end once the supply/system water temperature is raised to 16ºC.
Boiler Protection	The burner firing rate is being reduced because of an excessive difference between the appliance supply and return temperatures. The firing rate will begin increasing once the temperature difference is less than 25ºC.
Lockout Description	The lockout which currently has the Appliance shut down is displayed.

APPLIANCE CODES

Appliance type	Model	Natural gas	Propane
Prestige Solo/Excellence (3-way valve)	24	A211	A212
	32	A221	A222
Prestige Solo	42	A131	A132
	50	A141	A142
	75	A151	A152
	100	A161	A162
	120	A171	A172
HeatMaster C / TC	25	A421	A422
HeatMaster TC	35	A431	A432
	45	A441	A442
	70	A451	A452
	85	A461	A462
	120	A471	A472
WaterMaster	25	A621	A622
	35	A631	A632
	45	A641	A642
	70	A651	A652
	85	A661	A662
	120	A671	A672
HeatMaster	201	A731	—

FACTORY SETTINGS AND RESET VALUES

CH Parameters	Factory settings			EZ Setup reset	Installer reset
	Prestige Excel.	Prestige Solo	HeatMaster WaterMaster		
Heating Operation	Enabled	Enabled	Enabled		Enabled
Demand	Thermostat & Outd. Curve	Thermostat & Outd. Curve	Thermostat & Outd. Curve	Thermostat & Outd. Curve	Thermostat & Outd. Curve
CH Maximum Capacity	100%	100%	100%		
CH Minimum Capacity	0%	0%	0%		
Absolute Max CH Setpoint	85°C	85°C	85°C		85°C
CH1 Max Setpoint	82°C	82°C	82°C	82°C	82°C
CH1 Min Setpoint	27°C	27°C	27°C	27°C	27°C
Outdoor Curve Coldest Day	-12°C	-12°C	-12°C		-12°C
Outdoor Curve Warmest Day	18°C	18°C	18°C		18°C
CH2 Circuit	Enabled	Enabled	Enabled		Enabled
CH2 Max Setpoint	60°C	60°C	60°C	60°C	60°C
CH2 Min Setpoint	27°C	27°C	27°C	27°C	27°C
Warm Weather Shutdown	Off	Off	Off	Off	Off
Circulation pump permanent	Disabled	Disabled	Disabled		Disabled
CH Post Pump time	5 min	5 min	5 min		5 min
Freeze Protection	Enabled	Enabled	Enabled		Enabled
Frost Protection Setpoint	-30°C	-30°C	-30°C		-30°C
Parallel Shift Value	0°C	0°C	0°C		0°C
CH Call Blocking	2 min	2 min	2 min		2 min
Appliance min CH setpoint	15°C	15°C	27°C		
DHW Parameters					
DHW Operation	Enabled	Enabled	Enabled	Enabled	Enabled
Demand	Sensor	Thermostat	Sensor	Thermostat	Thermostat
DHW max capacity	100%	100%	100%		
DHW Boiler Setpoint	75°C	75°C	75°C	75°C	75°C
DHW Setpoint	62°C	60°C	55°C	60°C	60°C
DHW on Differential	3°C	3°C	3°C		3°C
DHW Storage Adder	20°C	15°C	15°C		15°C
DHW Post Pump Time	1 min	1 min	2 min		1 min
DHW priority Timeout	Off	Off	Off	Off	Off
DHW priority	Enabled	Enabled	Enabled		Enabled
DHW Call Blocking	0 min	0 min	0 min		0 min
DHW to CH Call Blocking	1 min	1 min	1 min		1 min
Antilegionella Function	Enabled	Disabled	Enabled		Enabled
DHW ramp up	Off	Off	Off		

ACVMAX MENU STRUCTURE

Main Screen, Installer's Menu

- CH&DHW Settings
  - CH settings
  - DHW Settings
  - Boiler Settings
- Reset All Settings
- Manual Operation
- Cascade

DHW Settings

DHW Operation	Disabled Enabled
Demand	Thermostat Sensor
DHW max capacity	DHW max capacity
DHW Boiler Setpoint	DHW Boiler Setpoint
DHW Setpoint	DHW Setpoint
DHW on Differential	DHW on Differential
DHW Storage Adder	DHW Storage Adder
DHW Post Pump Time	DHW Post Pump Time
DHW Priority Timeout	DHW Priority Timeout
DHW Priority	Enabled Disabled
DHW Call Blocking	DHW Call Blocking
DHW to CH Call Blocking	DHW to CH Call Blocking
Antilegionella Function	Enabled Disabled
DHW Ramp up	DHW Ramp up

Heating Settings

Heating operation	Disabled Enabled
Demand	Thermostat & Outd. curve Thermostat and Setpoint Constant & Outd. Curve Constant & Setpoint 0-10V modulation Signal
CH maximum capacity	CH maximum capacity
CH minimum capacity	CH minimum capacity
Abs. max. CH setpoint	Abs. max. CH setpoint
CH1 max. setpoint	CH1 max. setpoint
CH1 min. setpoint	CH1 min. setpoint
Outd. Curve/ Coldest Day	Outd. Curve/ Coldest Day
Outd. Curve/ Warmest Day	Outd. Curve/ Warmest Day
CH2 circuit	Disabled Enabled
CH2 max. setpoint	CH2 max. setpoint
CH2 min. setpoint	CH2 min. setpoint
Warm Weather Shutdown	Warm Weather Shutdown
Circulation Pump Permanent	Disabled Enabled
CH Post Pump Time	CH Post Pump Time
Freeze Protection	Disabled Enabled
Frost Protection Setpoint	Frost Protection Setpoint
Parallel Shift Value	Parallel Shift Value
CH Call Blocking	CH Call Blocking
Appliance min CH Setpoint	Appliance min CH setpoint

Clicking on the bullet located in front of a menu title will take you to the function explanation.

Main Screen, Installer's Menu

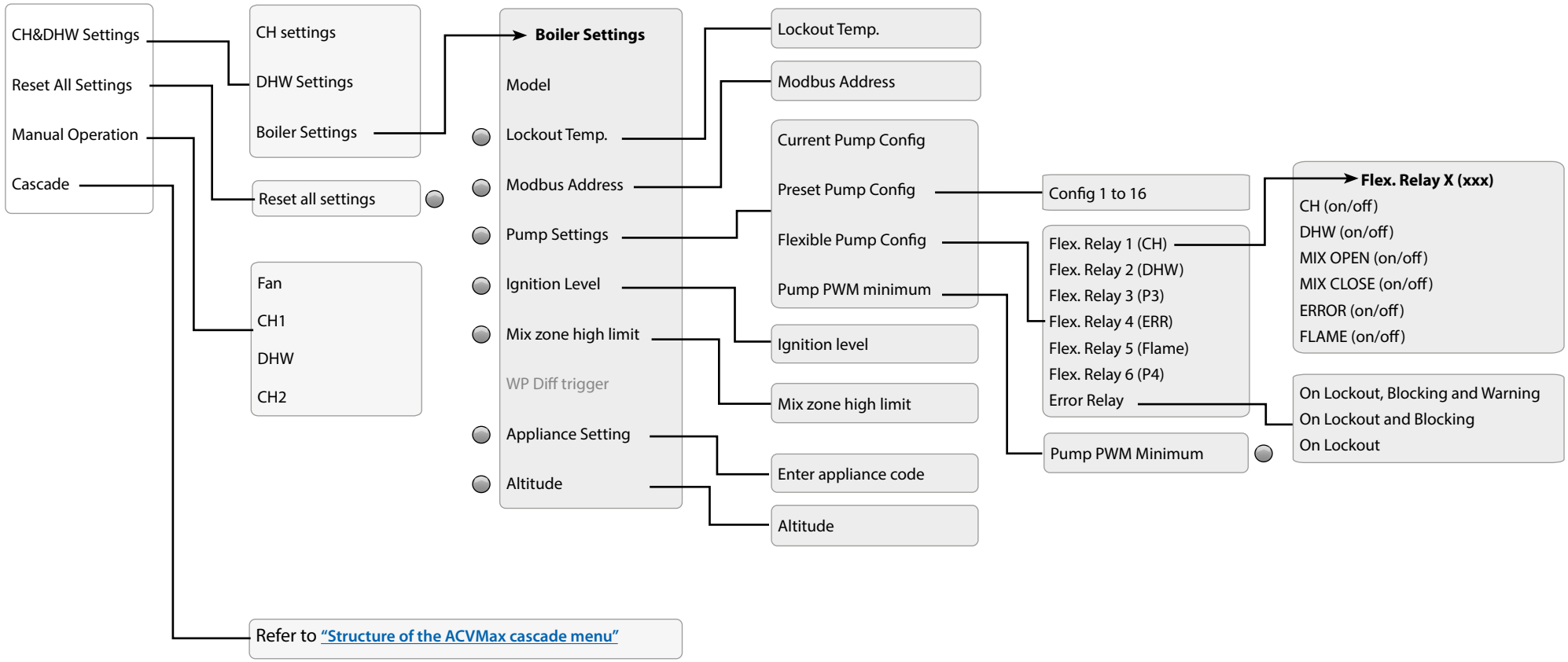

THE INSTALLER'S HANDBOOK FOR HEATING SYSTEMS CONTROLLED WITH ACVMAX

VOLUME 2
System Diagrams and ACVMax Setup

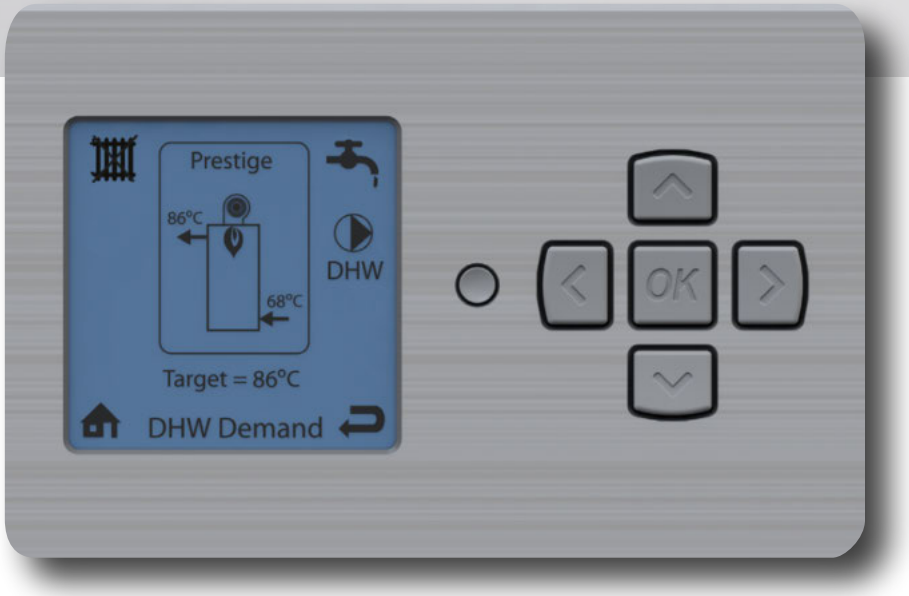

Prestige 24 - 32 Solo /Excellence
Prestige 42 - 50 - 75 - 100 - 120 Solo
HeatMaster 25 C
HeatMaster 25 - 35 - 45 - 70 - 85 - 120 TC
WaterMaster 25 - 35 - 45 - 70 - 85 - 120
HeatMaster 201

Applicable to appliances manufactured from March 2019, equipped with at least software version (DSP) 4.04

EXCELLENCE IN HOT WATER ACV

VOLUME 2 - SYSTEM DIAGRAMS AND ACVMAX SETUP

USER'S GUIDE 2-3
General 2-3
Resistance of the temperature sensors 2-3

PRESTIGE 3WV 2-4
Electrical Characteristics Prestige 24-32 Solo/Excellence 2-4
Pumps (Prestige 3WV) 2-6
Preset Configuration 1 2-7
Two heating circuits, with two room thermostats and optional outdoor sensor, and with DHW circuit. 2-7
Preset Configuration 2 2-8
Two heating circuits, with optional outdoor temperature sensor and room thermostats, and with DHW circuit. 2-8
Preset Configuration 3 2-9
High and Low temperature heating circuits, with optional outdoor temperature sensor and room thermostats, and with DHW circuit. 2-9
Preset Configuration 4 2-10
High and Low temperature heating circuits, with optional outdoor temperature sensor and room thermostats, and with DHW circuit. 2-10

PRESTIGE SOLO 2-11
Electrical Characteristics Prestige 42 - 50 - 75 Solo 2-11
Electrical Characteristics Prestige 100-120 Solo 2-11
Pumps (Prestige Solo) 2-14
Preset Configuration 1 2-15
High temperature heating circuit, possibly with optional outdoor temperature sensor and room thermostat, without DHW circuit. 2-15
High temperature heating circuit, circulator pumps on return lines, possibly with optional outdoor temperature sensor and room thermostat, and with DHW circuit. 2-16
High temperature heating circuit, circulator pumps on supply lines, possibly with optional outdoor temperature sensor and room thermostat, and with DHW circuit. 2-17
High temperature heating circuit, with additional load pump, possibly with optional outdoor temperature sensor and room thermostat, and with DHW circuit. 2-18
High temperature heating circuits, with additional load pump, possibly with optional outdoor temperature sensor and room thermostats, and with DHW circuit. 2-19
High temperature heating circuits, with additional load pump, possibly with optional outdoor temperature sensor and room thermostats, and with DHW circuit. 2-20
Preset Configuration 4 2-21
High temperature heating circuits, with additional load pump, possibly with optional outdoor temperature sensor and room thermostats, and with DHW circuit. 2-21
High temperature heating circuits, with additional load pump, possibly with optional outdoor temperature sensor and room thermostats, and with DHW circuit. 2-22
Preset Configuration 3 2-23
High temperature heating circuits controlled through solenoid valves, with additional load pump, possibly with optional outdoor temperature sensor and room thermostats, and with DHW circuit and DHW sensor. 2-23
High temperature heating circuits controlled through solenoid valves, possibly with optional outdoor temperature sensor and room thermostats, and with DHW circuit and DHW sensor. 2-24
Preset Configuration 7 2-25
High and Low temperature heating circuits, with room control on Heating Circuit 1 (CH1) and possible second room control, possibly with optional outdoor temperature sensor and room thermostat. 2-25
High and Low temperature heating circuits, with room control on Heating Circuit 1 (CH1) and possible second room control, possibly with optional outdoor temperature sensor and room thermostat, and with DHW circuit. 2-26
Preset Configuration 9 2-27
Preset Configuration 12 2-28
High and Low temperature heating circuit, possibly with optional outdoor temperature sensor and room thermostat, and with DHW circuit. 2-28

HEATMASTER 25 C, HEATMASTER TC / WATERMASTER, HEATMASTER 201 2-29
Electrical Characteristics HeatMaster® 25 C, HeatMaster® 25-35-45 TC, and WaterMaster 25 - 35 - 45 2-29
Electrical Characteristics of HeatMaster® 70-85 TC, WaterMaster 70 - 85 2-32
Electrical Characteristics of HeatMaster® 120 TC, WaterMaster 120 2-32
Electrical Characteristics HeatMaster® 201 2-34
Pumps (HeatMaster 25C, 25-35-45-70-85-120TC, 201) 2-36
Pumps (WaterMaster) 2-36

HEATMASTER C, HEATMASTER TC 2-37
Preset Configuration 16 2-37
High temperature heating circuit, possibly with optional outdoor temperature sensor and room thermostat. 2-37
High temperature heating circuits, possibly with optional outdoor temperature sensor and room thermostats. 2-38
Preset Configuration 15 2-39
High and Low temperature heating circuits, possibly with optional outdoor temperature sensor and room thermostats. 2-39
Preset Configuration 15 2-40
High and Low temperature heating circuits, possibly with optional outdoor temperature sensor and room thermostats. 2-40

GENERAL

This volume contains information on the electrical connections, hydraulic connections and ACVMax controller set-up for Prestige 24-32 Solo/Excellence, Prestige 42-50-75-100-120 Solo, HeatMaster 25- 35-45-75-80-120 TC, HeatMaster 25 C, HeatMaster 201 and WaterMaster 25 - 35 - 45 - 70 - 85 - 120 that are required to operate the system configuration you have selected.

For simple configurations, the EZ setup function of the ACVMax can be used (refer to the Installation, Operation and Maintenance manual provided with the appliance).

For more complex systems, with additional pumps, several configurations have already been preset in the ACVMax controller to help you. Please refer to the table of contents on the previous page and to the following pages to see the predetermined configurations for the chosen appliance type.

For any system that is not mentioned in this manual, please contact your ACV representative.

RESISTANCE OF THE TEMPERATURE SENSORS

T° [°C]	R Ω	T° [°C]	R Ω	T° [°C]	R Ω
- 20	98200	25	12000	70	2340
- 15	75900	30	9800	75	1940
- 10	58800	35	8050	80	1710
- 5	45900	40	6650	85	1470
0	36100	45	5520	90	1260
5	28600	50	4610	95	1100
10	22800	55	3860	100	950
15	18300	60	3250		
20	14700	65	2750		

ELECTRICAL CHARACTERISTICS PRESTIGE 24-32 SOLO/EXCELLENCE

			PRESTIGE			
			Solo		Excellence	
Main Characteristics			**24**	**32**	**24**	**32**
Rated voltage		V~	230	230	230	230
Rated frequency		Hz	50	50	50	50
Electrical consumption	Max.	W	89	94	89	94
	Min.	W	15	15	15	15
Electrical consumption at 30% load		W	17	17	17	17
Electrical consumption in standby		W	5	5	5	5
Rated current (Fuse)		A	16	16	16	16
Class		IP	X4D	X4D	X4D	X4D

The power cord may only be replaced by a genuine ACV spare part, P/N 257F1180.

Key

To WD

1. 230 V power supply plug
2. Ground
3. ON/OFF master switch
4. Gas valve rectified
5. Burner power supply
6. Terminal block for optional items
   - : Alarm (ERR) **230 VAC OUTPUT !**
   - : CH circuit circulator pump (CH)
   - : DHW circuit circulator pump (DHW)
7. Optional terminal block for optional items:
   - : Pump (P3 and P4 terminals)
   - : Flame terminal (versatile connection according to configuration) **230 VAC OUTPUT !**
8. Modulating pump PWM
9. 3-way valve stepper motor
10. Burner PWM plug
11. NTC5 flue gas temperature sensor
12. NTC2 return sensor
13. NTC1 supply sensor
14. NTC - Low temperature circuit

In boiler versions produced before mid-2019, please connect wires as follows for low temp circuit operation : black wires from X3, terminals 1 & 6 must be routed to X20, terminals 3 & 4.

15. High limit switch
16. Low water pressure sensor
17. PCB (Display)
18. ACVMax programmation plug
19. A & B Modbus (option)
20. NTC3 DHW sensor (option for Prestige 24 - 32 Solo))
21. NTC4 outdoor temperature sensor (option)
22. Room thermostat 1 (option)
23. 0-10 Volt (option)
24. Room thermostat 2 (option)
25. Connection for interface control unit
26. Ignition and ionization cable
27. 5AT slow-blow fuse (3x) for internal and optional circuits*

* 5AT slow-blow fuse (2x) for internal circuits and connection of CH, DHW and Flame output + 5AT slow-blow fuse (1x) for connection of Alarm, P3 and P4 (connector P14)

2 spare 5AT slow-blow fuses are located on the back side of the electrical box, for fuse replacement, if required.

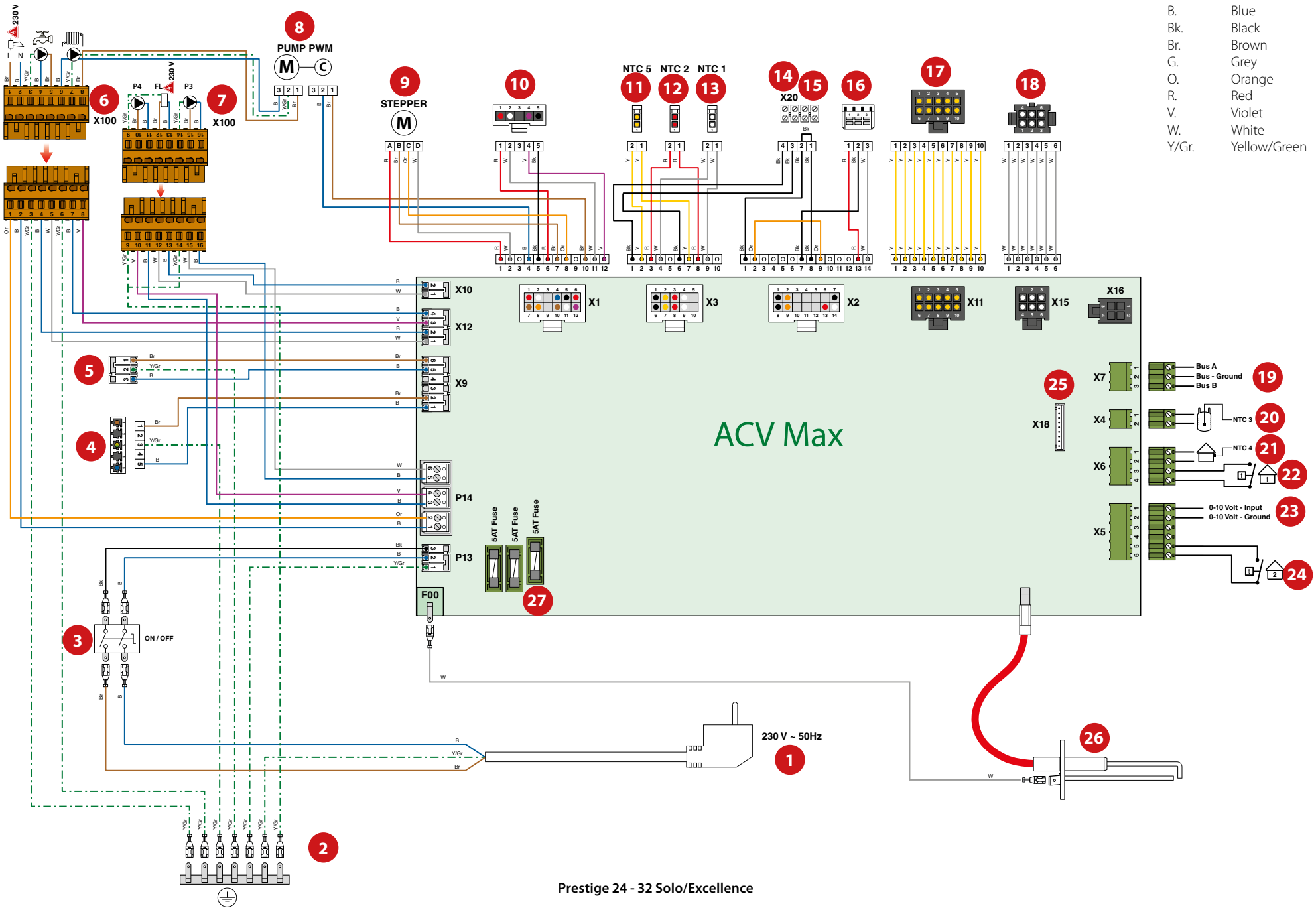

Prestige 24 - 32 Solo/Excellence

PUMPS (PRESTIGE 3WV)

The pump configurator system is based on the demands of the hydraulic system that you design. In the table below, you will find the 4 configurations that have been preset in the ACVMax controller for the Prestige 24-32 Solo/Excellence (identified as "Prestige 3WV" on the display), based on different hydraulic schemes that can be used.

The table shows which relays are activated under which condition.

The names in the table refer to the demand done by CH1 by CH2 or DHW respectively, the demand to open/close the Motor of a mixing valve or reflect the activation of the alarm (error) or Flame output relay.

In the following pages, you will find these diagrams with a configuration number that corresponds to the setting in the display.

Config. No	Flex 4 ERR	Flex 6 P4	Flex 3 P3	Flex 2 DHW	Flex 1 CH	Flex 5 FL
1	Error	CH2	CH1		CH1/CH2/ DHW	Flame
2	Error	CH2	CH1	CH1/CH2	CH1/CH2/ DHW	Flame
3	Error	CH2	CH1	Mix open	CH1/CH2/ DHW	Mix close
4	Error	CH1/CH2	CH1	Mix open	CH1/CH2/ DHW	Mix close

PRESET CONFIGURATION 1

Pump Configuration 1

Flex 4 ERR	Flex 6 P4	Flex 3 P3	Flex 2 DHW	Flex 1 CH	Flex 5 FL
Error	CH2	CH1		CH1/CH2/ DHW	Flame

Two heating circuits, with two room thermostats and optional outdoor sensor, and with DHW circuit.

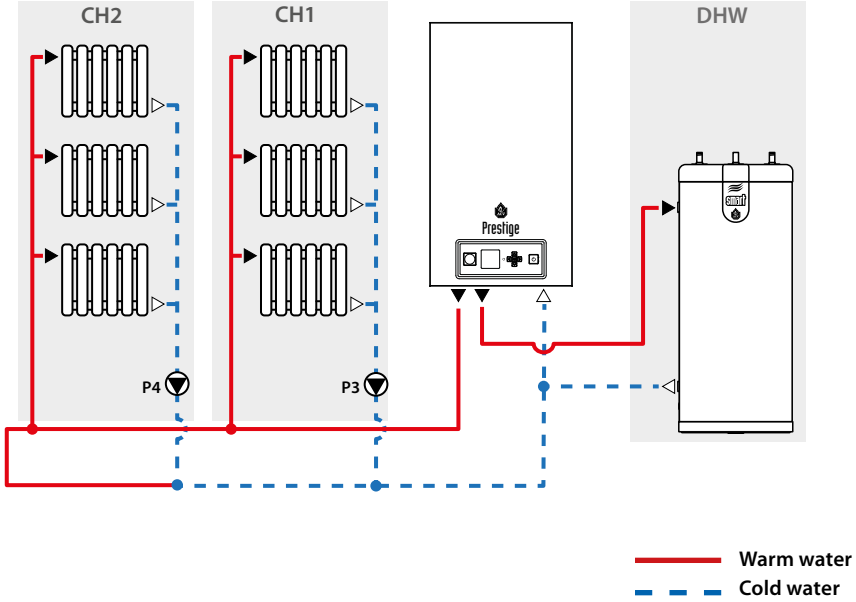

Electrical board terminals	Terminal name --> Connected to	
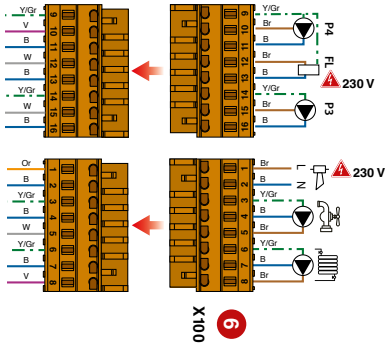	..... P4	--> P4 pump (CH2 circuit)
	..... FL	--> Flame sensor
	..... P3	--> P3 pump (CH1 circuit)
	..... ERR	--> Error (Alarm)
	..... DHW	--> None
	..... CH	--> Built-in circulator pump
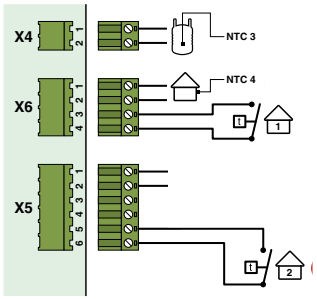	..... DHW sensor (NTC3)	
	..... Optional outdoor temp. sensor (NTC4)	
	..... Optional room thermostat 1	
	..... Optional room thermostat 2	

ACVMax interface settings using the Installer menu (Installer code needed, see "Installer Code"):

Main Screen	Sub-screen	item	Sub-item	Required selection
		Model		Prestige 3WV (Pre-set)
		Pump Settings	Preset Pump Config	Solo/Excell. 1
		Heating Operation		Enabled ( )
		CH2 Circuit		Enabled
		Demand		Thermostat and Outd. curve
		DHW Operation		Enabled ( )
		Demand		Sensor

PRESET CONFIGURATION 2

Pump Configuration 2

Flex 4 ERR	Flex 6 P4	Flex 3 P3	Flex 2 DHW	Flex 1 CH	Flex 5 FL
Error	CH2	CH1	CH1/CH2	CH1/CH2/ DHW	Flame

Two heating circuits, with optional outdoor temperature sensor and room thermostats, and with DHW circuit.

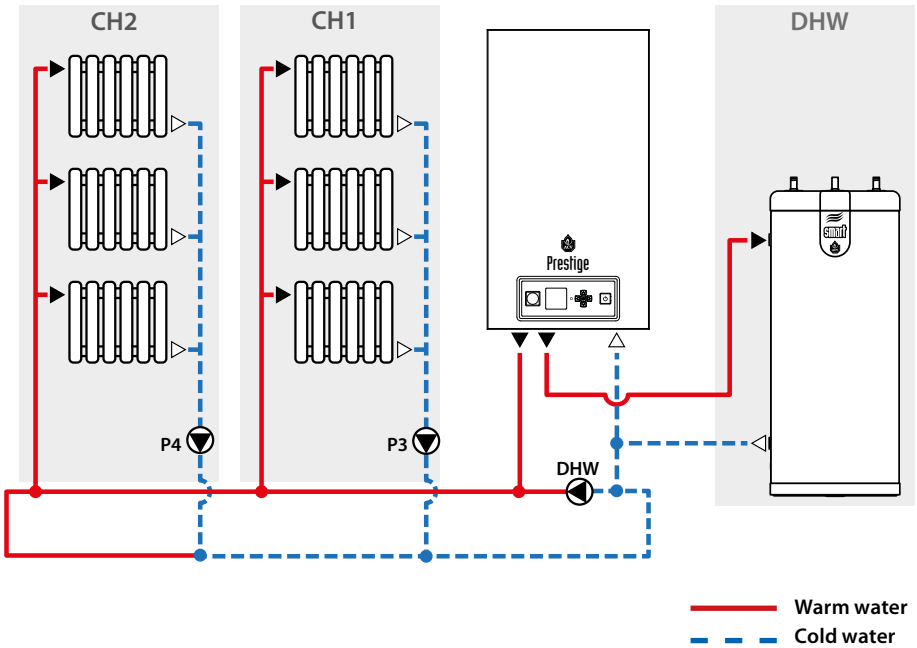

Electrical board terminals	Terminal name --> Connected to	
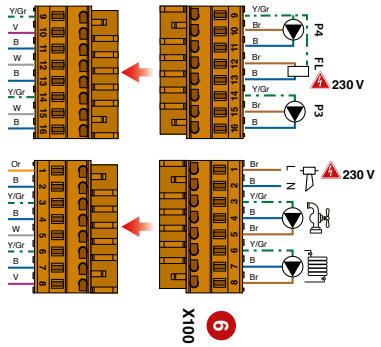	..... P4	--> P4 pump (CH2 circuit)
	..... FL	--> Flame sensor
	..... P3	--> P3 pump (CH1 circuit)
	..... ERR	--> Error (Alarm)
	..... DHW	--> CH circuit
	..... CH	--> Built-in circulator pump
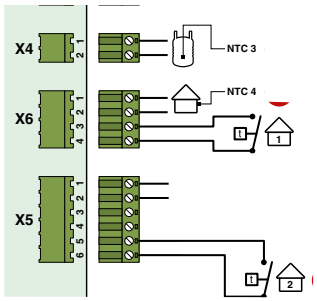	..... DHW sensor (NTC3)	
	..... Optional outdoor temp. sensor (NTC4)	
	..... Optional room thermostat 1	
	..... Optional room thermostat 2	

ACVMax interface settings using the Installer menu (Installer code needed, see "Installer Code"):

Main Screen	Sub-screen	item	Sub-item	Required selection
		Model		Prestige 3WV (Pre-set)
		Pump Settings	Preset Pump Config	Solo/Excell. 2
		Heating Operation		Enabled
		CH2 Circuit		Enabled
		Demand		Thermostat and Outd. curve
		DHW Operation		Enabled
		Demand		Sensor

PRESET CONFIGURATION 3

Pump Configuration 3

Flex 4 ERR	Flex 6 P4	Flex 3 P3	Flex 2 DHW	Flex 1 CH	Flex 5 FL
Error	CH2	CH1	Mix open	CH1/CH2/ DHW	Mix close

High and Low temperature heating circuits, with optional outdoor temperature sensor and room thermostats, and with DHW circuit.

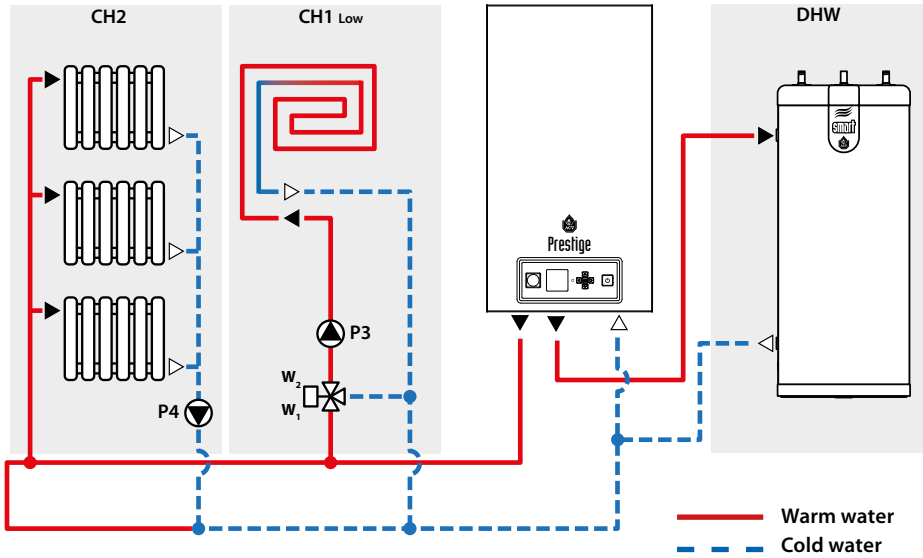

Essential recommendations for the correct operation of the system

- **Low temperature sensor is not shown here, but make sure to install one to control the circuit (using the additional wiring made available in the optional wiring kit).**
- **Low temperature cut-out thermostat is not shown here, but make sure to install one to protect the low temperature circuit (to be connected to X20 terminal, ref. 14 on Prestige 24-32 Solo/Excellence wiring diagram).**

Electrical board terminals	Terminal name --> Connected to	
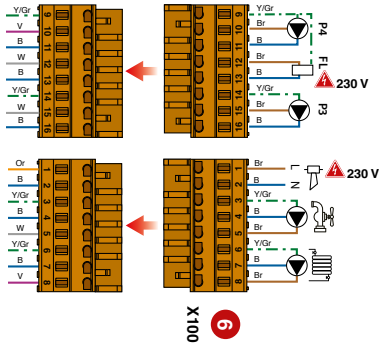	..... P4	--> P4 pump (CH2 circuit)
	..... FL	--> Motorized 3-way valve CLOSE
	..... P3	--> P3 pump ($CH1_{Low}$ circuit)
	..... ERR	--> Error (Alarm)
	..... DHW	--> Motorized 3-way valve OPEN
	..... CH	--> Built-in circulator pump
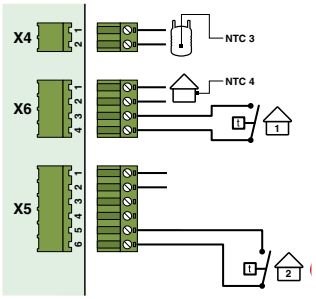	..... DHW sensor (NTC3)	
	..... Optional outdoor temp. sensor (NTC4)	
	..... Optional room thermostat 1*	
	..... Optional room thermostat 2	

***The room thermostat 1 always controls the low temperature system.**

ACVMax interface settings using the Installer menu
(Installer code needed, see "Installer Code"):

Main Screen	Sub-screen	item	Sub-item	Required selection
		Model		Prestige 3WV (Pre-set)
		Pump Settings	Preset Pump Config	Solo/Excell. 3
		Heating Operation		Enabled
		CH2 Circuit		Enabled
		Demand		Thermostat and Outd. curve
		DHW Operation		Enabled
		Demand		Sensor

PRESET CONFIGURATION 4

Pump Configuration 4

Flex 4 ERR	Flex 6 P4	Flex 3 P3	Flex 2 DHW	Flex 1 CH	Flex 5 FL
Error	CH1/CH2	CH1	Mix open	CH1/CH2/ DHW	Mix close

High and Low temperature heating circuits, with optional outdoor temperature sensor and room thermostats, and with DHW circuit.

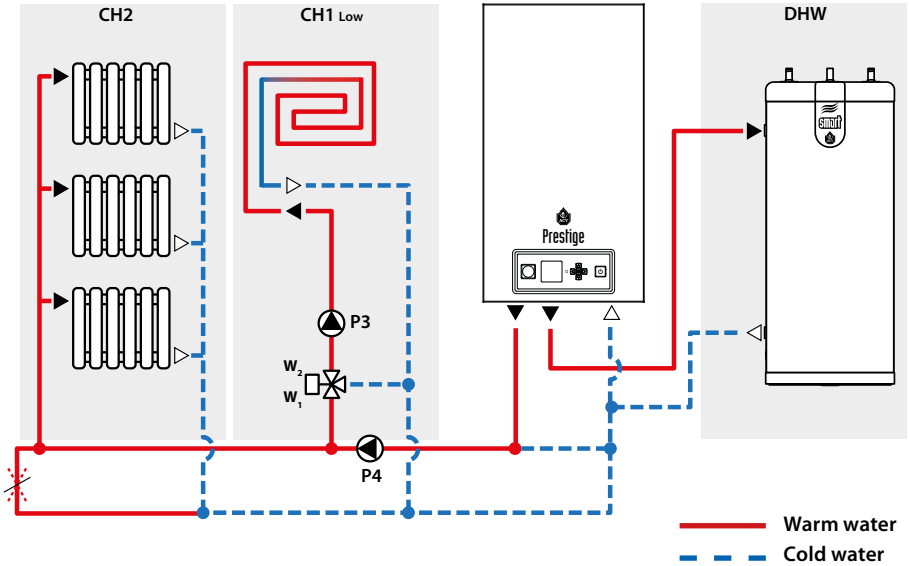

Essential recommendations for the correct operation of the system

- **Low temperature sensor is not shown here, but make sure to install one to control the circuit (using the additional wiring made available in the optional wiring kit).**
- **Low temperature cut-out thermostat is not shown here, but make sure to install one to protect the low temperature circuit (to be connected to X20 terminal, ref. 14 on Prestige 24-32 Solo/Excellence wiring diagram).**

Electrical board terminals	Terminal name --> Connected to	
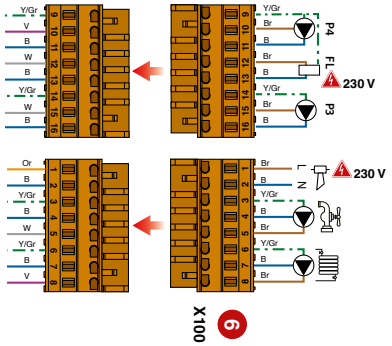	..... P4	--> P4 pump (CH circuit)
	..... FL	--> Motorized 3-way valve CLOSE
	..... P3	--> P3 pump ($CH1_{Low}$ circuit)
	..... ERR	--> Error (Alarm)
	..... DHW	--> Motorized 3-way valve OPEN
	..... CH	--> Built-in circulator pump
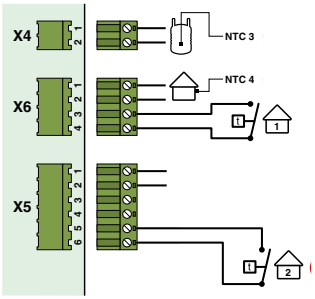	..... DHW sensor (NTC3)	
	..... Optional outdoor temp. sensor (NTC4)	
	..... Optional room thermostat 1*	
	..... Optional room thermostat 2	

***The room thermostat 1 always controls the low temperature system.**

ACVMax interface settings using the Installer menu (Installer code needed, see "Installer Code"):

Main Screen	Sub-screen	item	Sub-item	Required selection
		Model		Prestige 3WV (Pre-set)
		Pump Settings	Preset Pump Config	Solo/Excell. 4
		Heating Operation		Enabled
		CH2 Circuit		Enabled
		Demand		Thermostat and Outd. curve
		DHW Operation		Enabled
		Demand		Sensor

ELECTRICAL CHARACTERISTICS PRESTIGE 42 - 50 - 75 SOLO

To WD

		PRESTIGE SOLO		
Main Characteristics		**42**	**50**	**75**
Rated voltage	V~	230	230	230
Rated frequency	Hz	50	50	50
Electrical consumption	W	78	78	126
Class	IP	X4D	X4D	X4D

ELECTRICAL CHARACTERISTICS PRESTIGE 100-120 SOLO

To WD

		PRESTIGE SOLO	
Main Characteristics		**100**	**120**
Rated voltage	V~	230	230
Rated frequency	Hz	50	50
Electrical consumption	W	150	180
Class	IP	X4D	X4D

Key

1. 230 V power supply
2. Ground
3. ON/OFF master switch
4. Gas valve (rectified for Prestige 42 - 50 - 75 Solo)
5. Burner power supply
6. Terminal block for optional items
   - : Alarm (ERR terminal) **230 VAC OUTPUT !**
   - : CH circuit circulator pump (CH terminal)
   - : DHW circuit circulator pump (DHW terminal)
7. Optional terminal block for optional items:
   - : Pump (P3 and P4 terminals) **230 VAC OUTPUT !**
   - : Flame terminal (versatile connection according to configuration)
8. Burner PWM plug
9. NTC5 flue gas temperature sensor
10. NTC2 return sensor
11. NTC1 supply sensor
12. Gas pressure switch
13. NTC - Low temperature circuit

In boiler versions produced before 2019, please connect wires as follows for low temp circuit operation : black wires from X3, terminals 1 & 6 must be routed to X20, terminals 3 & 4.

14. High limit switch
15. Low water pressure sensor
16. PCB (Display)
17. ACVMax programmation plug
18. Cascade harness connection terminal
19. A & B Modbus (option)
20. NTC3 DHW sensor (option)
21. NTC4 outdoor temperature sensor (option)
22. Room thermostat 1 (option)
23. 0-10 Volt (option)
24. Cascade temp. sensor (option)
25. Room thermostat 2 (option)
26. Ignition and ionization cable
27. Connection for Interface Control Unit (option)
28. 5AT slow-blow fuse (3x) for internal and optional circuits*

* 5AT slow-blow fuse (2x) for internal circuits and connection of CH, DHW and Flame output + 5AT slow-blow fuse (1x) for connection of Alarm, P3 and P4 (connector P14).

2 spare 5AT slow-blow fuses are located on the back side of the electrical box, for fuse replacement, if required.

PRESTIGE SOLO

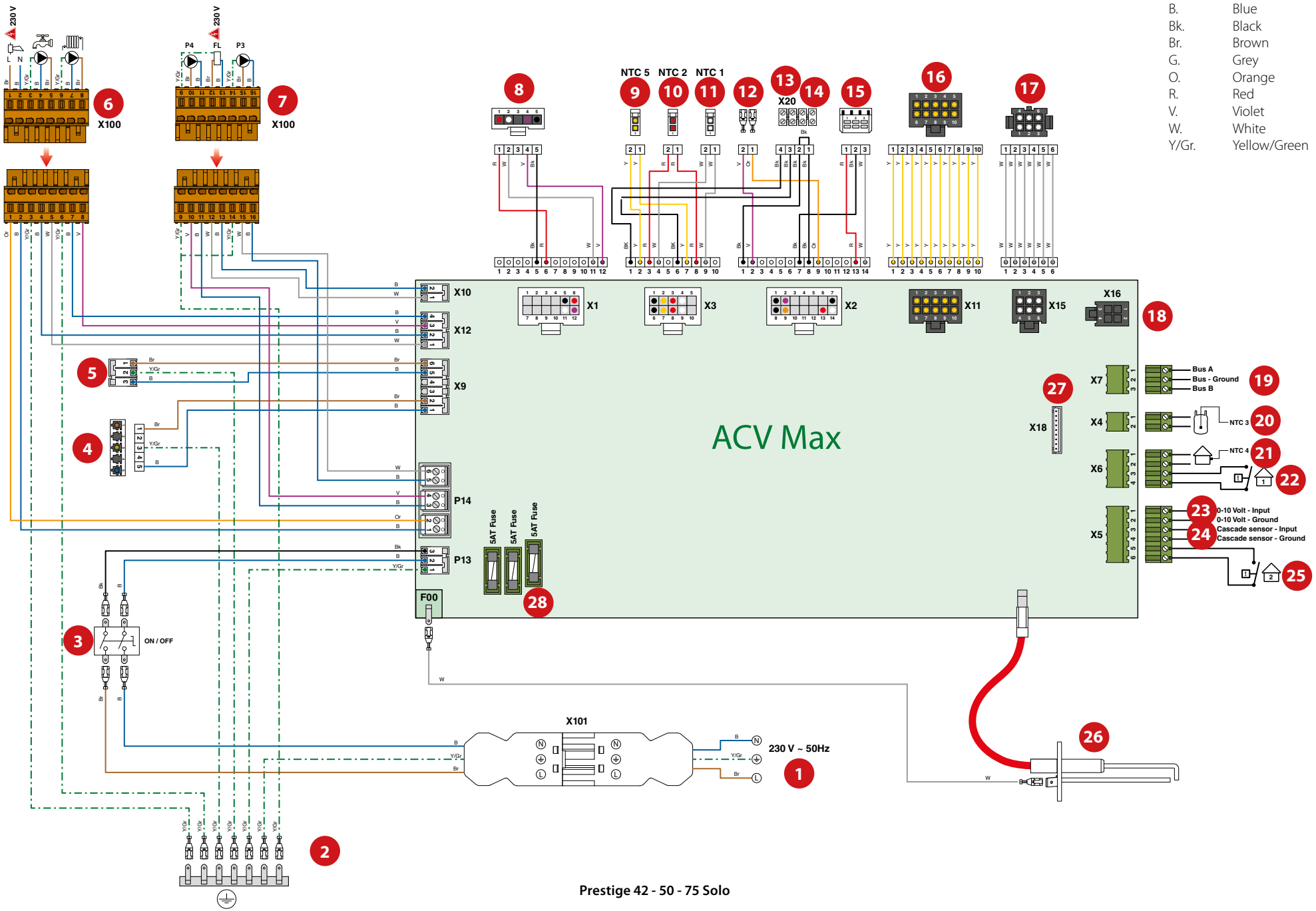

Prestige 42 - 50 - 75 Solo

EXCELLENCE IN HOT WATER

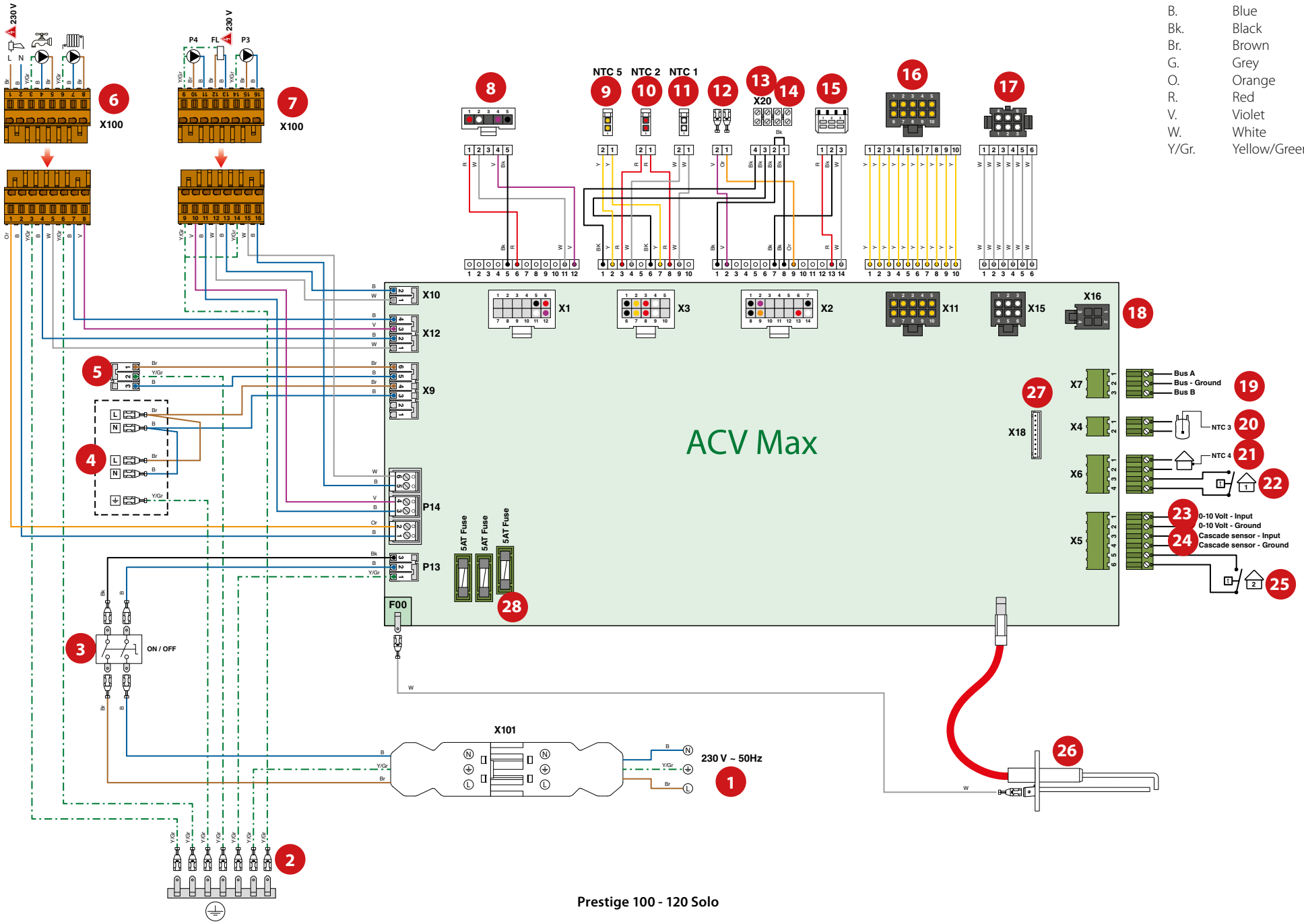

Prestige 100 - 120 Solo

PUMPS (PRESTIGE SOLO)

The pump configurator system is based on the demands of the hydraulic system that you design. In the table below, you will find the 13 configurations that have been preset in the ACVMax controller for the Prestige 42-50-75-100-120 Solo (identified as "Prestige Solo" on the display), based on different hydraulic schemes that can be used.

The table shows which relays are activated under which condition.

The names in the table refer to the demand done by CH1 by CH2 or DHW respectively, the demand to open close the Motor of a mixing valve or reflect the activation of the alarm (error) or Flame output relay.

In the following pages, you will find these diagrams with a configuration number that corresponds to the setting in the display.

Config. No	Flex 4 ERR	Flex 6 P4	Flex 3 P3	Flex 2 DHW	Flex 1 CH	Flex 5 FL
1	Error	CH2	CH1/CH2/ DHW	DHW	CH1	Flame
2	Error	CH1	CH1/CH2/ DHW	DHW	CH1/CH2/ DHW	Flame
3	Error		CH1/CH2	DHW	CH1/CH2	Flame
4	Error	CH2	CH1/CH2	DHW	CH1	Flame
5	Error	CH2	CH1	DHW	CH1/CH2/ DHW	Flame
6	Error	CH1	CH1	DHW	CH1	Flame
7	Error	CH1/CH2	Mix open	DHW	CH1 low	Mix close
8	Error	CH2	CH1/CH2	CH1/CH2/ DHW	CH1	Flame
9	Error	CH/DHW	Mix open	DHW	CH1 low	Mix close
10	Mix open	CH1/CH2	CH1/CH2	DHW	CH1 low	Mix close
11	Mix open	CH1/CH2	CH2	DHW	CH1 low	Mix close
12	Mix open	CH1/CH2/ DHW	CH2	DHW	CH1 low	Mix close
13	Error	CH1/CH2	CH2	Mix open	CH1 low	Mix close

DO NOT generate a DHW demand in preset configuration 13 !!

General Remark

- **Preset configurations 2 and 5 are for Cascade systems. Please refer to "VOLUME 3 - Cascade Systems"**

PRESET CONFIGURATION 1

Pump Configuration 1					
Flex 4 ERR	Flex 6 P4	Flex 3 P3	Flex 2 DHW	Flex 1 CH	Flex 5 FL
Error	CH2	CH1/CH2/ DHW	DHW	CH1	Flame

High temperature heating circuit, possibly with optional outdoor temperature sensor and room thermostat, without DHW circuit.

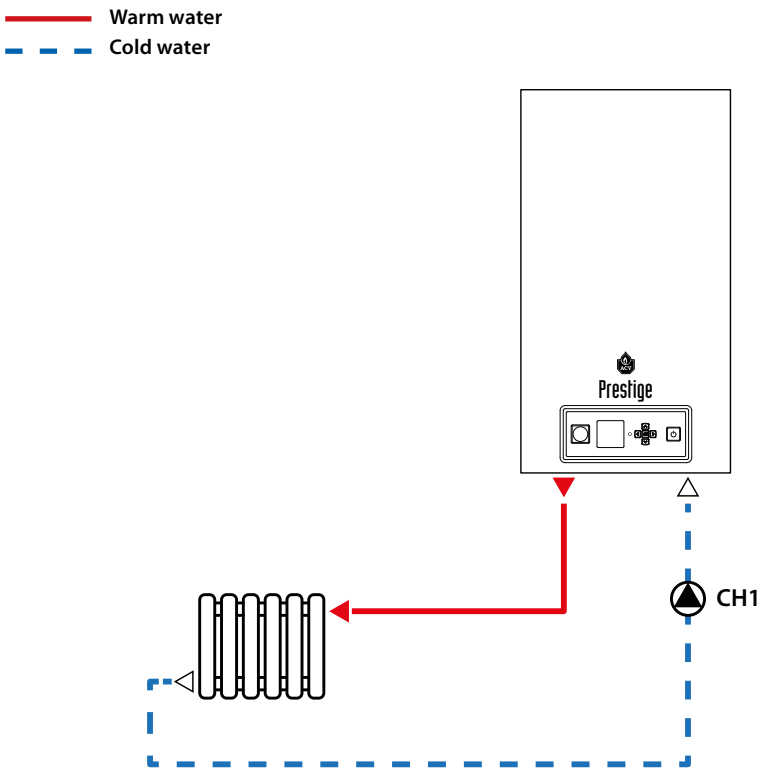

Electrical board terminals	Terminal name --> Connected to	
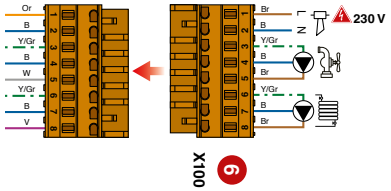	..... ERR	--> Error (Alarm)
	..... DHW	--> None
	..... CH	--> CH pump
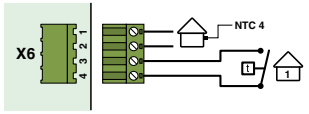	..... Optional outdoor temp. sensor	
	..... Optional room thermostat	

ACVMax interface settings using the Installer menu (Installer code needed, see "Installer Code"):

Main Screen	Sub-screen	item	Sub-item	Required selection
		Model		Prestige Solo (Pre-Set)
		Pump Settings	Preset Pump Config	Config 1
		Heating Operation		Enabled
		Demand		Thermostat and Outd. curve
		DHW Operation		Disabled

PRESTIGE SOLO

High temperature heating circuit, circulator pumps on return lines, possibly with optional outdoor temperature sensor and room thermostat, and with DHW circuit.

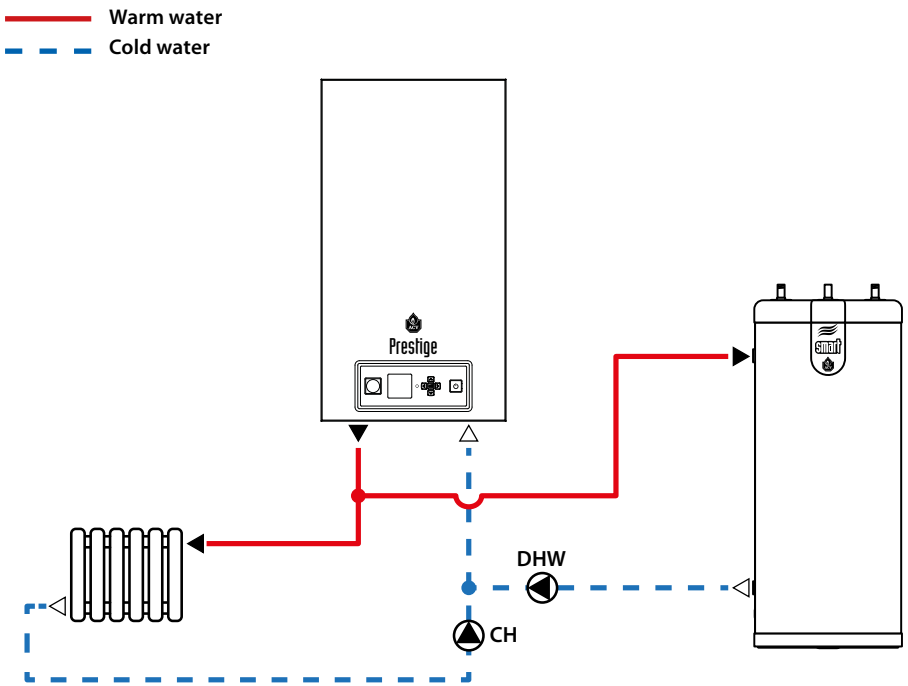

Electrical board terminals	Terminal name --> Connected to	
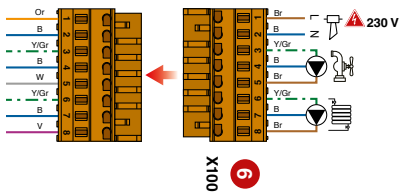	..... ERR	--> Error (Alarm)
	..... DHW	--> DHW pump
	..... CH	--> CH pump
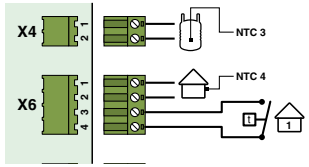	..... DHW sensor (NTC3)	
	..... Optional outdoor temp. sensor (NTC4)	
	..... Optional room thermostat	

ACVMax interface settings using the Installer menu (Installer code needed, see "Installer Code"):

Main Screen	Sub-screen	item	Sub-item	Required selection
		Model		Prestige Solo (Pre-Set)
		Pump Settings	Preset Pump Config	Config 1
		Heating Operation		Enabled
		CH2 Circuit		Disabled
		Demand		Thermostat and Outd. curve
		DHW Operation		Enabled
		Demand		Sensor

Pump Configuration 1

Flex 4 ERR	Flex 6 P4	Flex 3 P3	Flex 2 DHW	Flex 1 CH	Flex 5 FL
Error	CH2	CH1/CH2/ DHW	DHW	CH1	Flame

High temperature heating circuit, circulator pumps on supply lines, possibly with optional outdoor temperature sensor and room thermostat, and with DHW circuit.

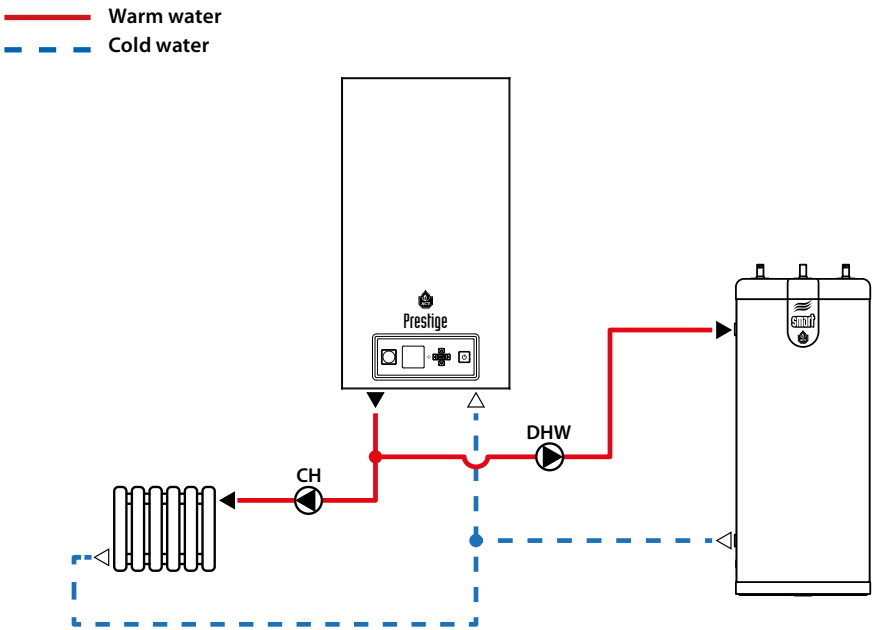

Electrical board terminals	Terminal name --> Connected to
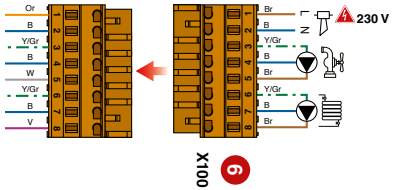	..... ERR --> Error (Alarm) ..... DHW --> DHW pump ..... CH pump --> CH pump
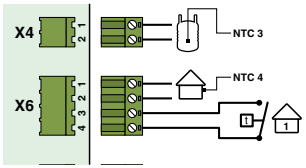	..... DHW sensor (NTC3) ..... Optional outdoor temp. sensor (NTC4) ..... Optional room thermostat

ACVMax interface settings using the Installer menu (Installer code needed, see "Installer Code"):

Main Screen	Sub-screen	item	Sub-item	Required selection
		Model		Prestige Solo (Pre-Set)
		Pump Settings	Preset Pump Config	Config 1
		Heating Operation		Enabled
		CH2 Circuit		Disabled
		Demand		Thermostat and Outd. curve
		DHW Operation		Enabled
		Demand		Sensor

Pump Configuration 1

Flex 4 ERR	Flex 6 P4	Flex 3 P3	Flex 2 DHW	Flex 1 CH	Flex 5 FL
Error	CH2	CH1/CH2/ DHW	DHW	CH1	Flame

High temperature heating circuit, with additional load pump, possibly with optional outdoor temperature sensor and room thermostat, and with DHW circuit.

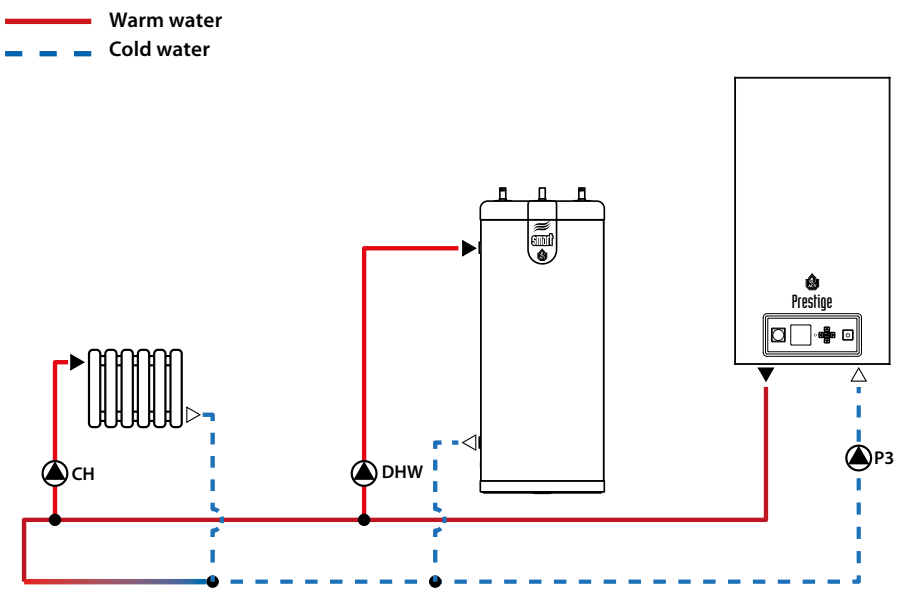

Electrical board terminals	Terminal name --> Connected to	
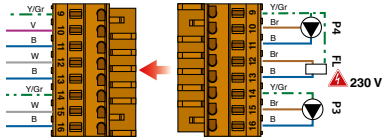	..... P4	--> None
	..... FL	--> Flame sensor
	..... P3	--> P3 Pump
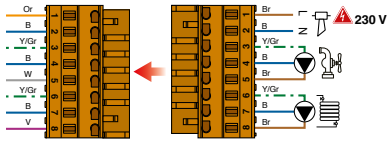	..... ERR	--> Error (Alarm)
	..... DHW	--> DHW pump
	..... CH	--> CH pump
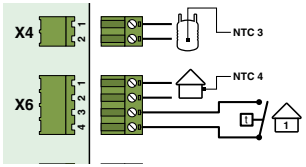	..... DHW sensor (NTC3)	
	..... Optional outdoor temp. sensor (NTC4)	
	..... Optional room thermostat	

ACVMax interface settings using the Installer menu (Installer code needed, see "Installer Code"):

Main Screen	Sub-screen	item	Sub-item	Required selection
		Model		Prestige Solo (Pre-Set)
		Pump Settings	Preset Pump Config	Config 1
		Heating Operation		Enabled ( )
		CH2 Circuit		Disabled
		Demand		Thermostat and Outd. curve
		DHW Operation		Enabled ( )
		Demand		Sensor

Pump Configuration 1

Flex 4 ERR	Flex 6 P4	Flex 3 P3	Flex 2 DHW	Flex 1 CH	Flex 5 FL
Error	CH2	CH1/CH2/ DHW	DHW	CH1	Flame

High temperature heating circuits, with additional load pump, possibly with optional outdoor temperature sensor and room thermostats, and with DHW circuit.

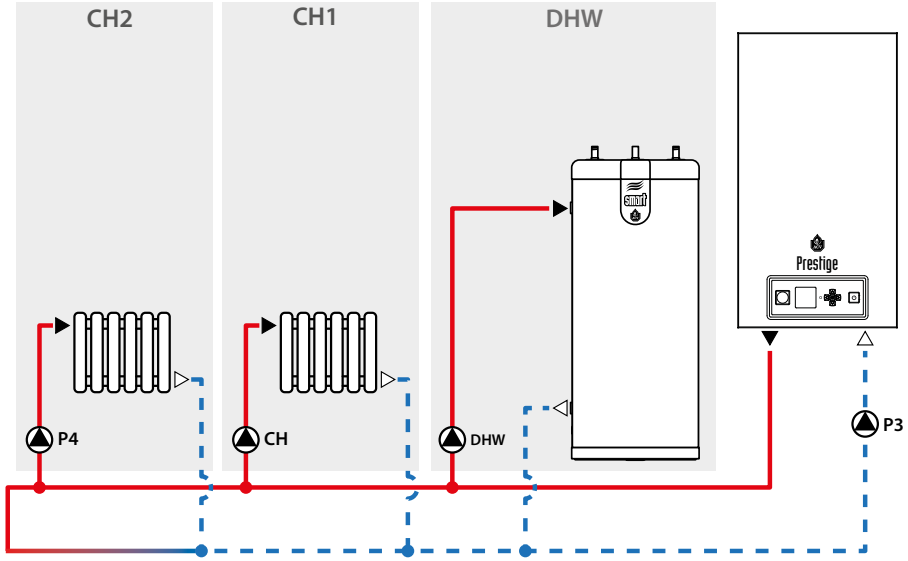

Warm water
Cold water

Pump Configuration 1

Flex 4 ERR	Flex 6 P4	Flex 3 P3	Flex 2 DHW	Flex 1 CH	Flex 5 Flame
Error	CH2	CH1/CH2/ DHW	DHW	CH1	Flame

Electrical board terminals	Terminal name --> Connected to	
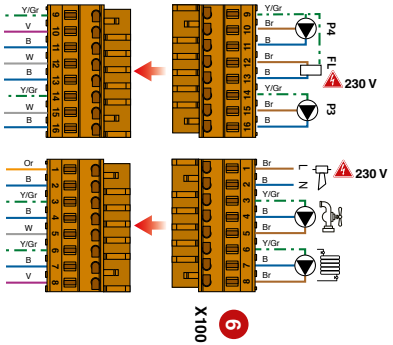	..... P4	--> P4 pump (CH2 circuit)
	..... FL	--> Flame sensor
	..... P3	--> P3 pump
	..... ERR	--> Error (Alarm)
	..... DHW	--> DHW pump
	..... CH	--> CH pump (CH1 circuit)
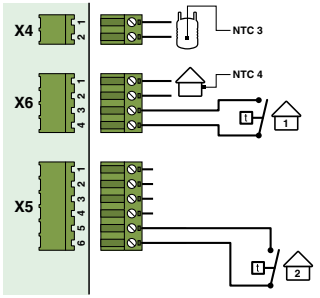	..... DHW sensor (NTC3)	
	..... Optional outdoor temp. sensor (NTC4)	
	..... Optional room thermostat 1	
	..... Optional room thermostat 2	

ACVMax interface settings using the Installer menu (Installer code needed, see "Installer Code"):

Main Screen	Sub-screen	item	Sub-item	Required selection
		Model		Prestige Solo (Pre-Set)
		Pump Settings	Preset Pump Config	Config 1
		Heating Operation		Enabled ( )
		CH2 Circuit		Enabled
		Demand		Thermostat and Outd. curve
		DHW Operation		Enabled ( )
		Demand		Sensor

PRESTIGE SOLO

High temperature heating circuits, with additional load pump, possibly with optional outdoor temperature sensor and room thermostats, and with DHW circuit.

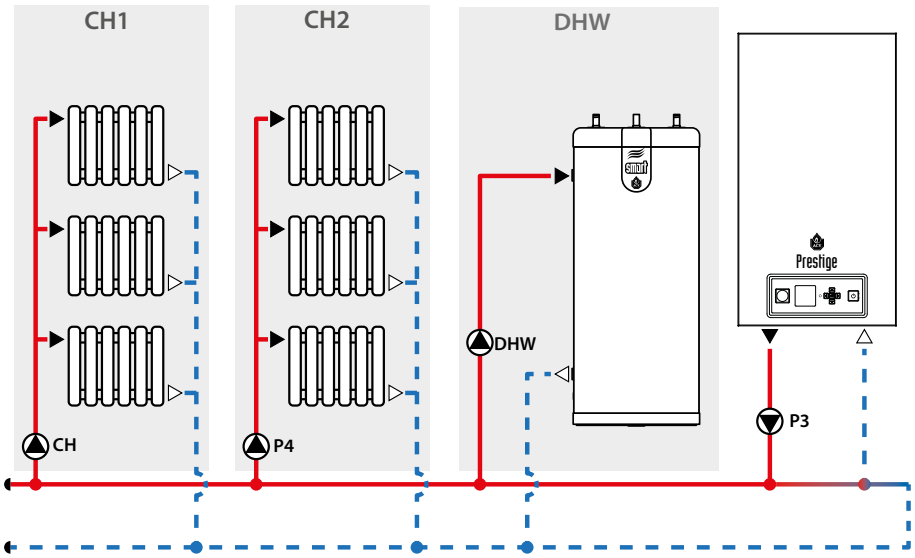

Warm water
Cold water

Pump Configuration 1

Flex 4 ERR	Flex 6 P4	Flex 3 P3	Flex 2 DHW	Flex 1 CH	Flex 5 FL
Error	CH2	CH1/CH2/ DHW	DHW	CH1	Flame

Electrical board terminals	Terminal name --> Connected to	
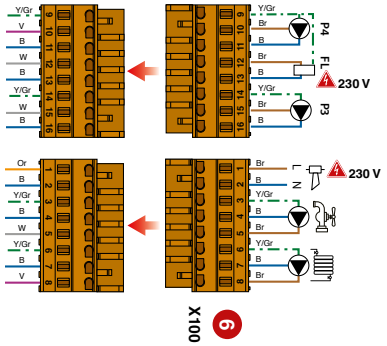	..... P4	--> P4 pump (CH2 circuit)
	..... FL	--> Flame sensor
	..... P3	--> P3 pump
	..... ERR	--> Error (Alarm)
	..... DHW	--> DHW pump
	..... CH	--> CH pump (CH1 circuit)
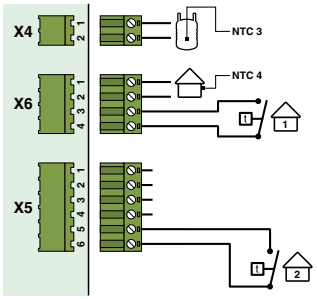	..... DHW sensor (NTC3)	
	..... Optional outdoor temp. sensor (NTC4)	
	..... Optional room thermostat 1	
	..... Optional room thermostat 2	

ACVMax interface settings using the Installer menu (Installer code needed, see "Installer Code"):

Main Screen	Sub-screen	item	Sub-item	Required selection
		Model		Prestige Solo (Pre-set)
		Pump Settings	Preset Pump Config	Config 1
		Heating Operation		Enabled
		CH2 Circuit		Enabled
		Demand		Thermostat and Outd. curve
		DHW Operation		Enabled
		Demand		Sensor

PRESET CONFIGURATION 4

Pump Configuration 4

Flex 4 ERR	Flex 6 P4	Flex 3 P3	Flex 2 DHW	Flex 1 CH	Flex 5 FL
Error	CH2	CH1/CH2	DHW	CH1	Flame

High temperature heating circuits, with additional load pump, possibly with optional outdoor temperature sensor and room thermostats, and with DHW circuit.

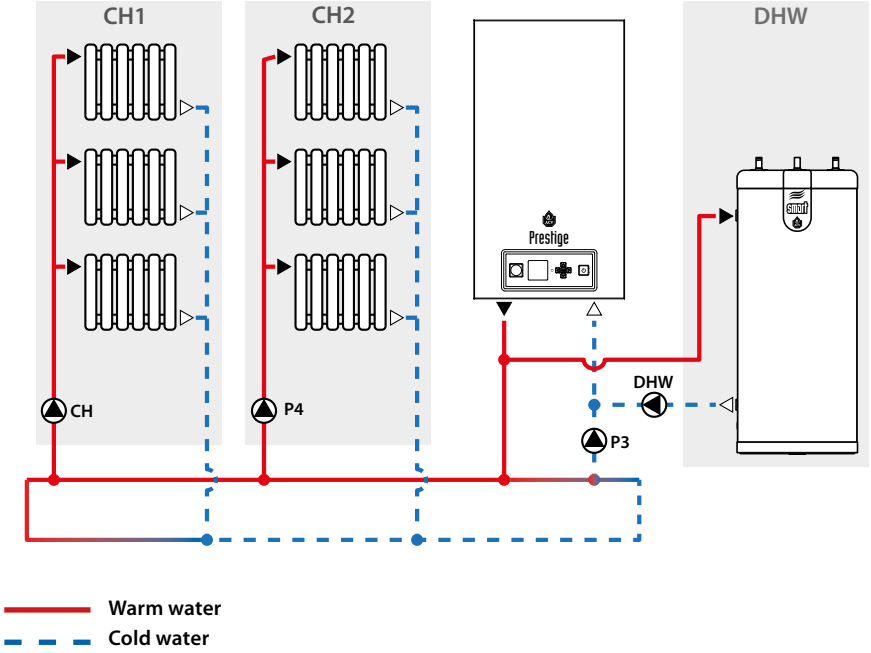

Electrical board terminals	Terminal name --> Connected to	
	..... P4	--> P4 pump (CH2 circuit)
	..... FL	--> Flame sensor
	..... P3	--> P3 pump
	..... ERR	--> Error (Alarm)
	..... DHW	--> DHW pump
	..... CH	--> CH pump (CH1 circuit)

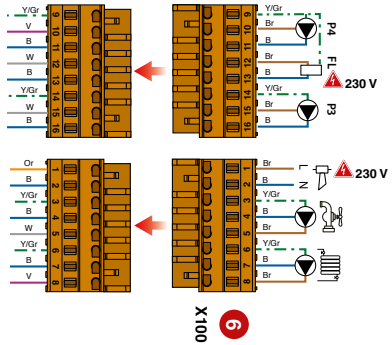

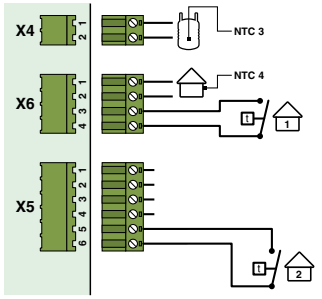

..... DHW sensor (NTC3)

..... Optional outdoor temp. sensor (NTC4)

..... Optional room thermostat 1

..... Optional room thermostat 2

ACVMax interface settings using the Installer menu (Installer code needed, see "Installer Code"):

Main Screen	Sub-screen	item	Sub-item	Required selection
		Model		Prestige Solo (Pre-Set)
		Pump Settings	Preset Pump Config	Config 4
		Heating Operation		Enabled
		CH2 Circuit		Ensabled
		Demand		Thermostat and Outd. curve
		DHW Operation		Enabled
		Demand		Sensor

High temperature heating circuits, with additional load pump, possibly with optional outdoor temperature sensor and room thermostats, and with DHW circuit.

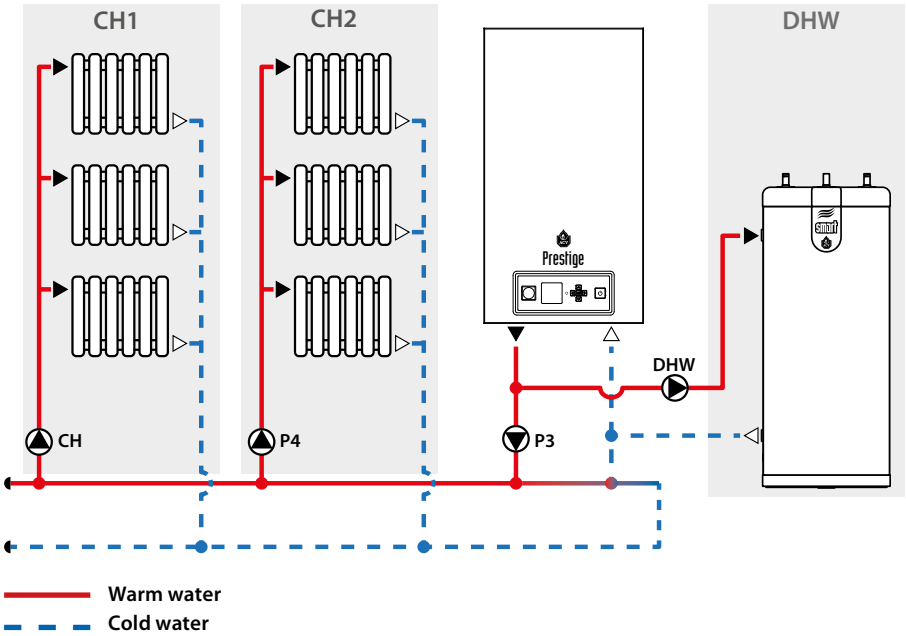

Pump Configuration 4

Flex 4 ERR	Flex 6 P4	Flex 3 P3	Flex 2 DHW	Flex 1 CH	Flex 5 FL
Error	CH2	CH1/CH2	DHW	CH1	Flame

Electrical board terminals	Terminal name --> Connected to	
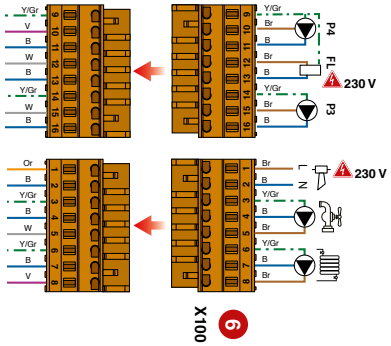	..... P4	--> P4 pump (CH2 circuit)
	..... FL	--> Flame
	..... P3	--> P3 pump
	..... ERR	--> Error (Alarm)
	..... DHW	--> DHW pump
	..... CH	--> CH pump (CH1 circuit)
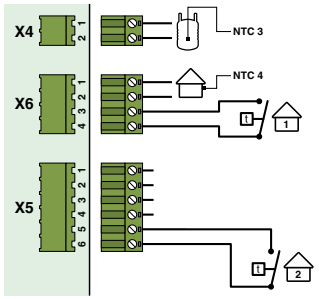	..... DHW sensor (NTC3)	
	..... Optional outdoor temp. sensor (NTC4)	
	..... Optional room thermostat 1	
	..... Optional room thermostat 2	

ACVMax interface settings using the Installer menu (Installer code needed, see "Installer Code"):

Main Screen	Sub-screen	item	Sub-item	Required selection
		Model		Prestige Solo (Pre-Set)
		Pump Settings	Preset Pump Config	Config 4
		Heating Operation		Enabled
		CH2 Circuit		Enabled
		Demand		Thermostat and Outd. curve
		DHW Operation		Enabled
		Demand		Sensor

PRESET CONFIGURATION 3

Pump Configuration 3

Flex 4 ERR	Flex 6 P4	Flex 3 P3	Flex 2 DHW	Flex 1 CH	Flex 5 FL
Error		CH1/CH2	DHW	CH1/CH2	Flame

High temperature heating circuits controlled through solenoid valves, with additional load pump, possibly with optional outdoor temperature sensor and room thermostats, and with DHW circuit and DHW sensor.

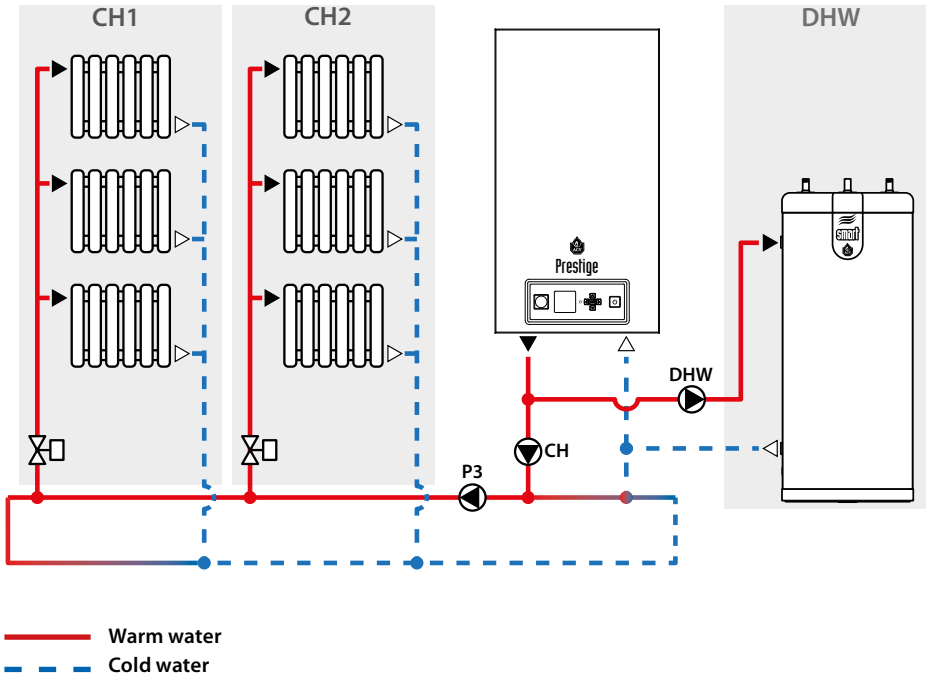

Electrical board terminals	Terminal name --> Connected to	
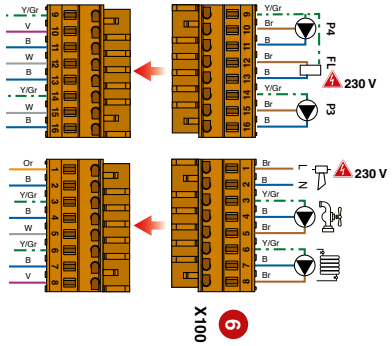	..... P4	--> None
	..... FL	--> Flame
	..... P3	--> P3 pump
	..... ERR	--> Error (Alarm)
	..... DHW	--> DHW pump
	..... CH	--> CH pump
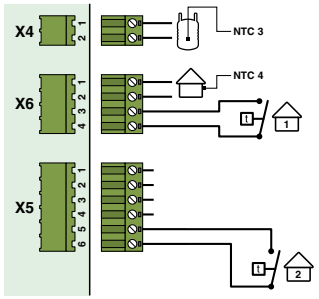	..... DHW sensor (NTC3)	
	..... Optional outdoor temp. sensor (NTC4)	
	..... Optional room thermostat 1	
	..... Optional room thermostat 2	

ACVMax interface settings using the Installer menu (Installer code needed, see "Installer Code"):

Main Screen	Sub-screen	item	Sub-item	Required selection
		Model		Prestige Solo (Pre-Set)
		Pump Settings	Preset Pump Config	Config 3
		Heating Operation		Enabled ( )
		CH2 Circuit		Enabled
		Demand		Thermostat and Outd. curve
		DHW Operation		Enabled ( )
		Demand		Sensor

PRESTIGE SOLO

High temperature heating circuits controlled through solenoid valves, possibly with optional outdoor temperature sensor and room thermostats, and with DHW circuit and DHW sensor.

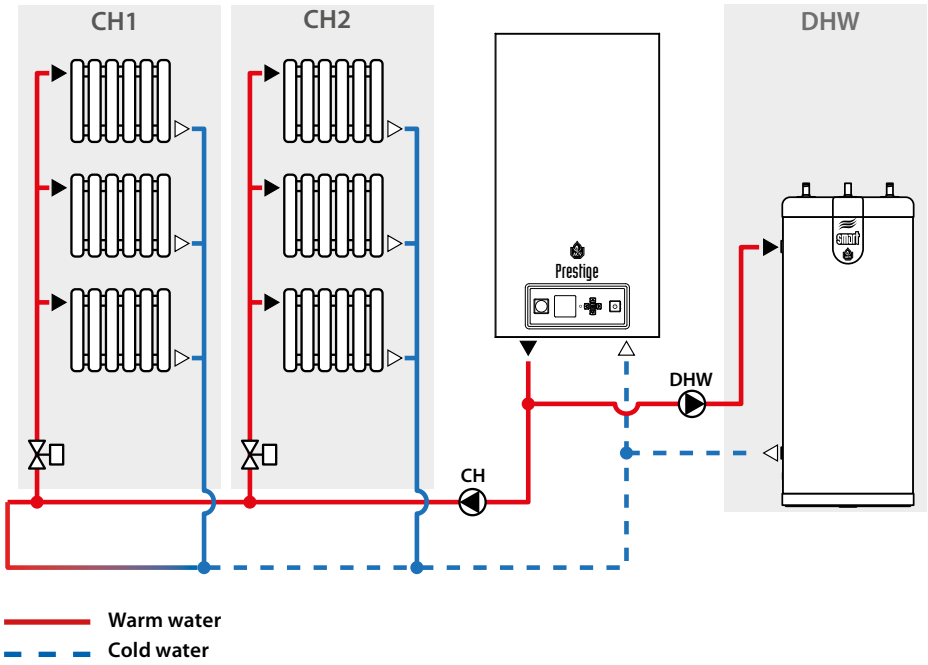

Electrical board terminals	Terminal name --> Connected to	
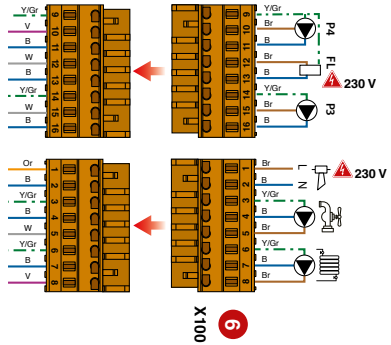	..... P4	--> None
	..... FL	--> Flame
	..... P3	--> None
	..... ERR	--> Error (Alarm)
	..... DHW	--> DHW pump
	..... CH	--> CH pump
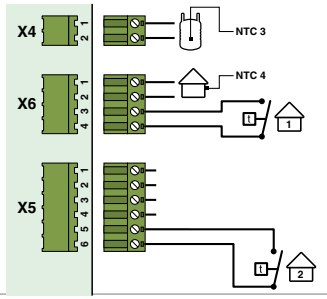	..... DHW sensor (NTC3)	
	..... Optional outdoor temp. sensor (NTC4)	
	..... Optional room thermostat 1	
	..... Optional room thermostat 2	

ACVMax interface settings using the Installer menu (Installer code needed, see "Installer Code"):

Main Screen	Sub-screen	item	Sub-item	Required selection
		Model		Prestige Solo (Pre-Set)
		Pump Settings	Preset Pump Config	Config 3
		Heating Operation		Enabled
		Demand		Thermostat and Outd. curve
		CH2 Circuit		Enabled
		DHW Operation		Enabled
		Demand		Sensor

Pump Configuration 3

Flex 4 ERR	Flex 6 P4	Flex 3 P3	Flex 2 DHW	Flex 1 CH	Flex 5 FL
Error		CH1/CH2	DHW	CH1/CH2	Flame

PRESET CONFIGURATION 7

Pump Configuration 7

Flex 4 ERR	Flex 6 P4	Flex 3 P3	Flex 2 DHW	Flex 1 CH	Flex 5 FL
Error	CH1/CH2	Mix open	DHW	CH1 low	Mix close

High and Low temperature heating circuits, with room control on Heating Circuit 1 (CH1) and possible second room control, possibly with optional outdoor temperature sensor and room thermostat.

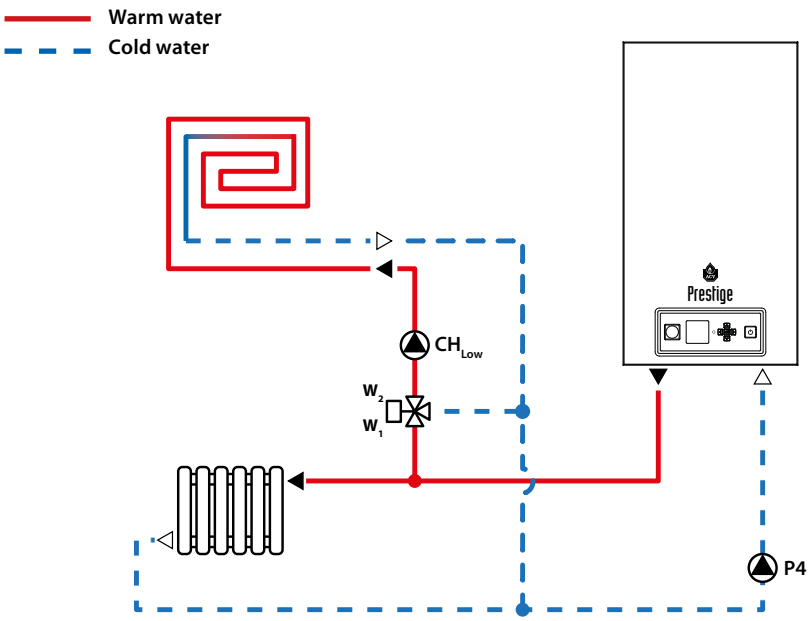

Essential recommendations for the correct operation of the system

- **Low temperature sensor is not shown here, but make sure to install one to control the circuit (using the additional wiring made available in the optional wiring kit).**
- **Low temperature cut-out thermostat is not shown here, but make sure to install one to protect the low temperature circuit (to be connected to X20 terminal, ref. 13 on Prestige 42-50-75-100-120 Solo wiring diagrams).**

Electrical board terminals	Terminal name --> Connected to	
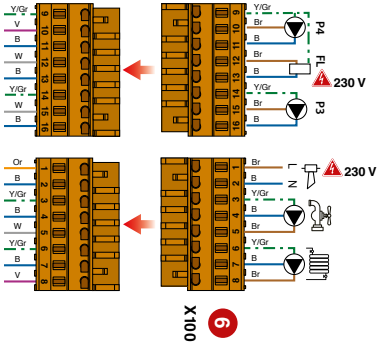	..... P4	-->P4 pump
	..... FL	-->Motorized 3-way valve CLOSE
	..... P3	-->Motorized 3-way valve OPEN
	..... ERR	-->Error (Alarm)
	..... DHW	-->None
	..... CH	-->CH pump (low temp circuit)
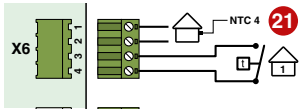	..... Optional outdoor temp. sensor (NTC4)	
	..... Optional room thermostat 1 *	

*** The room thermostat 1 always controls the low temperature system.**

ACVMax interface settings using the Installer menu (Installer code needed, see "Installer Code"):

Main Screen	Sub-screen	item	Sub-item	Required selection
		Model		Prestige Solo (Pre-Set)
		Pump Settings	Preset Pump Config	Config 7
		Heating Operation		Enabled
		Demand		Thermostat and Outd. curve
		CH2 Circuit		Enabled
		DHW Operation		Enabled
		Demand		Sensor

High and Low temperature heating circuits, with room control on Heating Circuit 1 (CH1) and possible second room control, possibly with optional outdoor temperature sensor and room thermostat, and with DHW circuit.

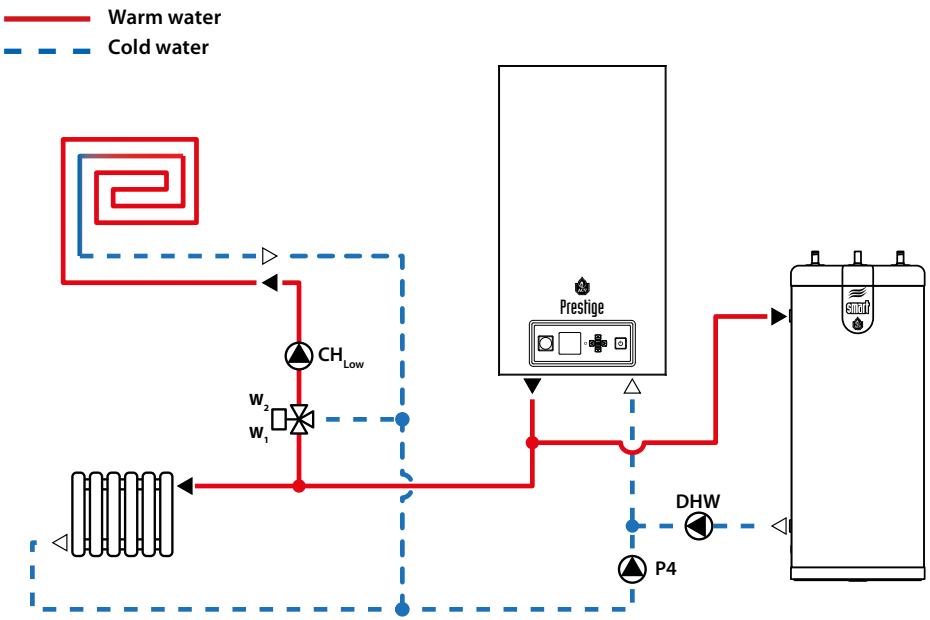

Electrical board terminals	Terminal name --> Connected to	
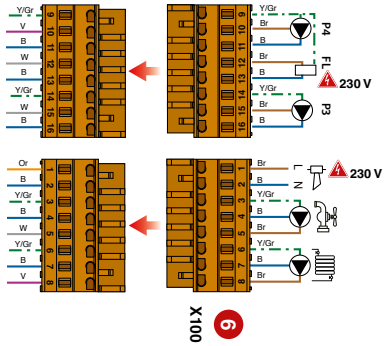	..... P4	--> P4 pump
	..... FL	--> Motorized 3-way valve CLOSE
	..... P3	--> Motorized 3-way valve OPEN
	..... ERR	--> Error (Alarm)
	..... DHW	--> DHW pump
	..... CH	--> CH pump (low temp circuit)

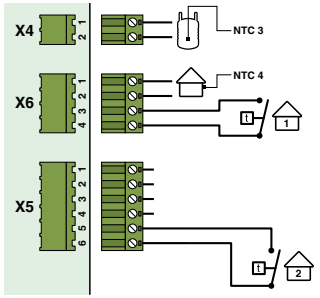

..... DHW sensor (NTC3)
..... Optional outdoor temp. sensor (NTC4)
..... Optional room thermostat 1*
..... Optional room thermostat 2

*** The room thermostat 1 always controls the low temperature system.**

Pump Configuration 7

Flex 4 ERR	Flex 6 P4	Flex 3 P3	Flex 2 DHW	Flex 1 CH	Flex 5 FL
Error	CH1/CH2	Mix open	DHW	CH1 low	Mix close

ACVMax interface settings using the Installer menu (Installer code needed, see "Installer Code"):

Main Screen	Sub-screen	item	Sub-item	Required selection
		Model		Prestige Solo (Pre-Set)
		Pump Settings	Preset Pump Config	Config 7
		Heating Operation		Enabled
		Demand		Thermostat and Outd. curve
		CH2 Circuit		Enabled
		DHW Operation		Enabled
		Demand		Sensor

PRESET CONFIGURATION 9

Do not use this configuration as it is not activated.

PRESET CONFIGURATION 12

Pump Configuration 12

Flex 4 ERR	Flex 6 P4	Flex 3 P3	Flex 2 DHW	Flex 1 CH	Flex 5 FL
Mix open	CH1/CH2/ DHW	CH2	DHW	CH1 low	Mix close

High and Low temperature heating circuit, possibly with optional outdoor temperature sensor and room thermostat, and with DHW circuit.

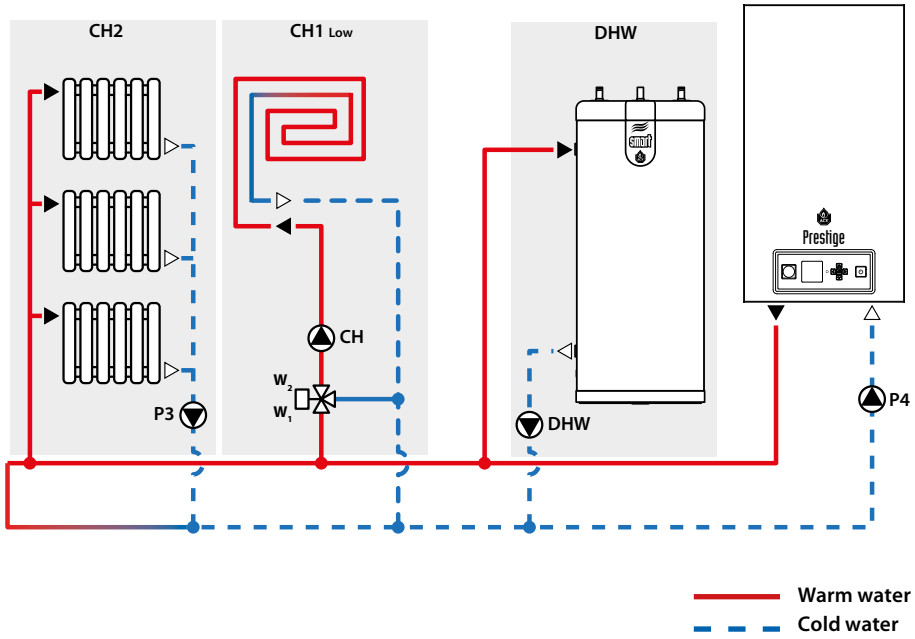

Electrical board terminals	Terminal name --> Connected to	
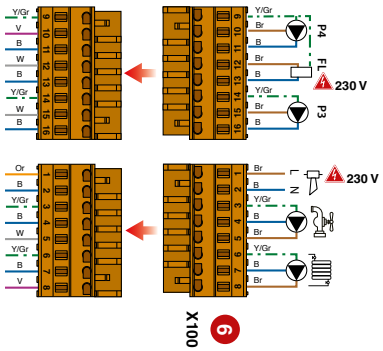	..... P4	-->P4 pump
	..... Flame	-->Motorized 3-way valve CLOSE
	..... P3	-->P3 pump (CH2 circuit)
	..... ERR	-->Motorized 3-way valve OPEN
	..... DHW	-->DHW pump
	..... CH	-->CH pump (low temp circuit)

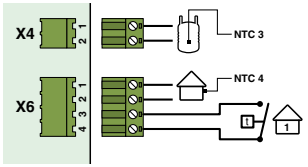

..... DHW sensor (NTC3)

..... Optional outdoor temp. sensor (NTC4)

..... Optional room thermostat 1*

*** The room thermostat 1 always controls the low temperature system.**

ACVMax interface settings using the Installer menu (Installer code needed, see "Installer Code"):

Main Screen	Sub-screen	item	Sub-item	Required selection
		Model		Prestige Solo (Pre-Set)
		Pump Settings	Preset Pump Config	Config 12
		Heating Operation		Enabled
		Demand		Thermostat and Outd. curve
		CH2 Circuit		Enabled
		DHW Operation		Enabled
		Demand		Sensor

ELECTRICAL CHARACTERISTICS HEATMASTER® 25 C, HEATMASTER® 25-35-45 TC, AND WATERMASTER 25 - 35 - 45

To WD

			HeatMaster TC / WaterMaster		
Main Characteristics			**25**	**35**	**45**
Rated voltage		V~	230	230	230
Rated frequency		Hz	50	50	50
Electrical consumption	Max.	W	95	111	126
	Min.	W	19	30	40
Electrical consumption at 30% load		W	24	34	45
Electrical consumption in standby		W	3	3	3
Rated current (Fuse)		A	16	16	16
Class			IP 20	IP 20	IP 20

			HeatMaster 25C
Main Characteristics			
Rated voltage		V~	230
Rated frequency		Hz	50
Electrical consumption	Max.	W	95
	Min.	W	19
Electrical consumption at 30% load		W	24
Electrical consumption in standby		W	3
Rated current (Fuse)		A	16
Class			IP 20

Key

1. 230 V power supply
2. Ground
3. ON/OFF master switch
4. Gas valve rectified
5. Burner power supply
6. Terminal block for optional items
   - : Alarm (ERR) **230 VAC OUTPUT !**
   - : DHW circuit circulator pump (DHW)
7. Terminal block for optional items:
   - : Pump (P3 and P4 terminals)
   - : Flame terminal (versatile connection according to configuration) **230 VAC OUTPUT !**
8. Modulating pump PWM
9. Burner PWM plug
10. NTC5 flue gas temperature sensor
11. NTC2 return sensor
12. NTC1 supply sensor
13. NTC - Low temperature circuit

In boiler versions produced before 2019, please connect wires as follows for low temp circuit operation : black wires from X3, terminals 1 & 6 must be routed to X20, terminals 3 & 4.

14. High limit switch
15. Low water pressure sensor
16. PCB (Display)
17. ACVMax programmation plug
18. A & B Modbus (option)
19. NTC3 DHW sensor
20. NTC4 outdoor temperature sensor (option)
21. Room thermostat 1 (option)
22. 0-10 Volt (option)
23. Room thermostat 2 (option)
24. Connection for interface control unit
25. Ignition and ionization cable
26. 5AT slow-blow fuse (3x) for internal and optional circuits*

* 5AT slow-blow fuse (2x) for internal circuits and connection of CH, DHW and Flame output + 5AT slow-blow fuse (1x) for connection of Alarm, P3 and P4 (connector P14)

2 spare 5AT slow-blow fuses are located on the back side of the electrical box, for fuse replacement, if required.

HEATMASTER 25 C, HEATMASTER TC / WATERMASTER, HEATMASTER 201

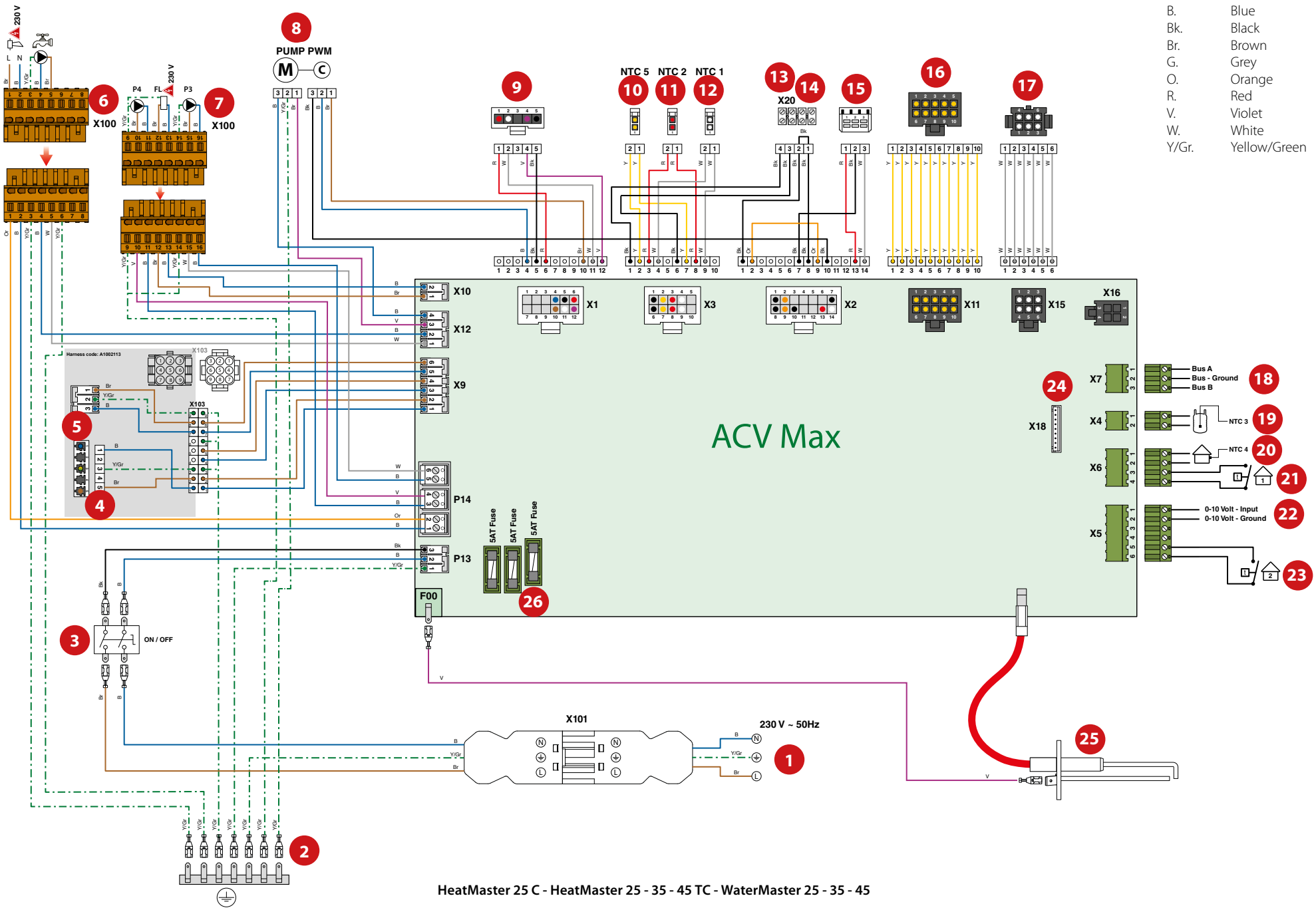

HeatMaster 25 C - HeatMaster 25 - 35 - 45 TC - WaterMaster 25 - 35 - 45

B.	Blue
Bk.	Black
Br.	Brown
G.	Grey
O.	Orange
R.	Red
V.	Violet
W.	White
Y/Gr.	Yellow/Green

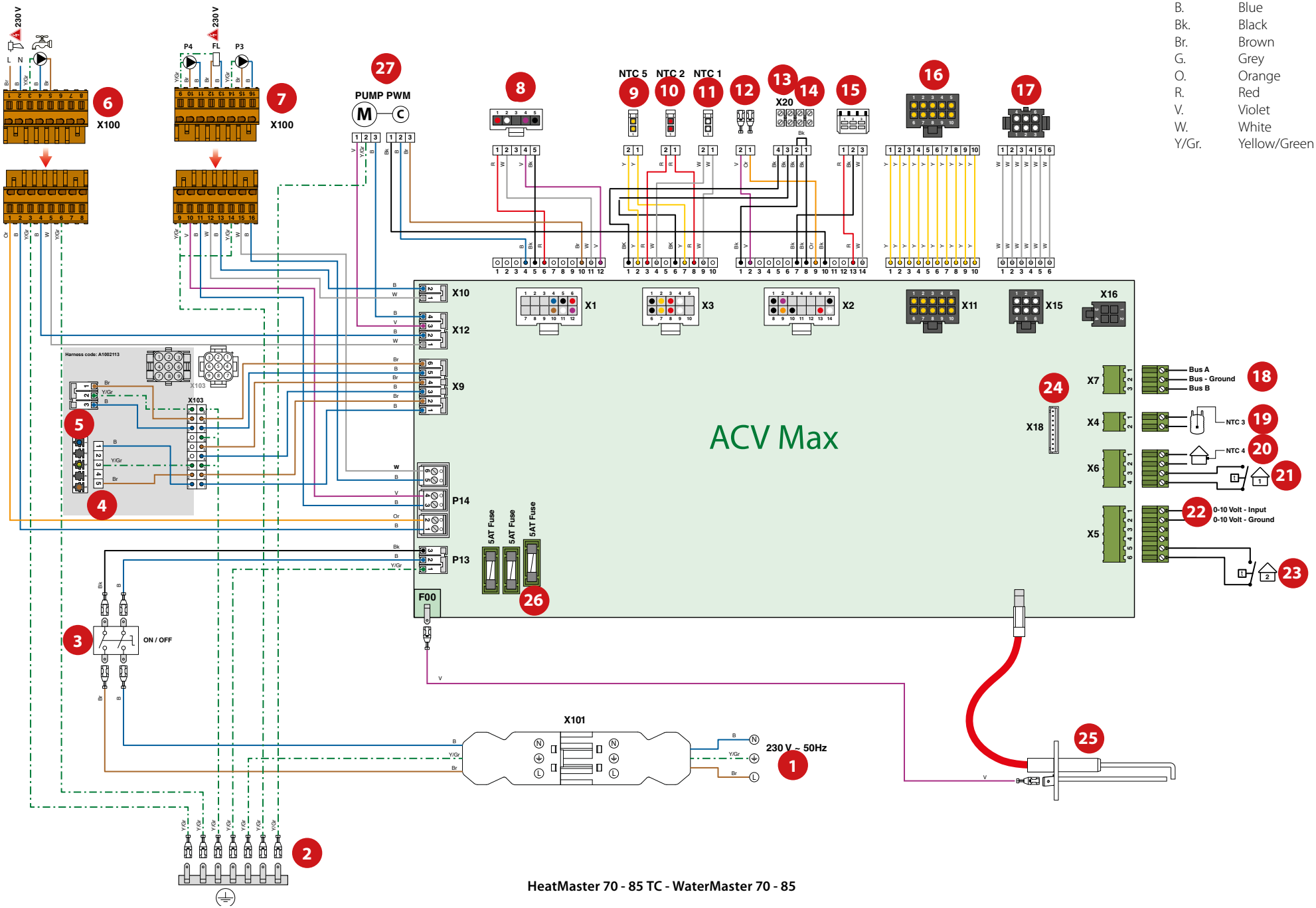

HeatMaster 70 - 85 TC - WaterMaster 70 - 85

ELECTRICAL CHARACTERISTICS OF HEATMASTER® 70-85 TC, WATERMASTER 70 - 85

To WD

			HeatMaster TC / WaterMaster	
Main Characteristics			**70**	**85**
Rated voltage		V~	230	230
Rated frequency		Hz	50	50
Electrical consumption	Max.	W	210	266
	Min.	W	50	46
Electrical consumption at 30% load		W	55	51
Electrical consumption in standby		W	3	3
Rated current (Fuse)		A	16	16
Class			IP 20	IP 20

ELECTRICAL CHARACTERISTICS OF HEATMASTER® 120 TC, WATERMASTER 120

To WD

			HeatMaster TC / WaterMaster
Main Characteristics			**120**
Rated voltage		V~	230
Rated frequency		Hz	50
Electrical consumption	Max.	W	327
	Min.	W	70
Electrical consumption at 30% load		W	74
Electrical consumption in standby		W	4
Rated current (Fuse)		A	16
Class			IP 20

Key

1. 230 V power supply
2. Ground
3. ON/OFF master switch
4. Gas valve
5. Burner power supply
6. Terminal block for optional items
   - : Alarm (ERR terminal) **230 VAC OUTPUT !**
   - : DHW circuit circulator pump (DHW terminal)
7. Terminal block for optional items:
   - : Pump (P3 and P4 terminals)
   - : Flame terminal (versatile connection according to configuration) **230 VAC OUTPUT !**
8. Burner PWM plug
9. NTC5 flue gas temperature sensor
10. NTC2 return sensor
11. NTC1 supply sensor
12. Gas pressure switch
13. NTC - Low temperature circuit

In boiler versions produced before mid-2019, please connect wires as follows for low temp circuit operation : black wires from X3, terminals 1 & 6 must be routed to X20, terminals 3 & 4.

14. High limit switch
15. Low water pressure sensor
16. PCB (Display)
17. ACVMax programmation plug
18. A & B Modbus (option)
19. NTC3 DHW sensor
20. NTC4 outdoor temperature sensor (option)
21. Room thermostat 1 (option)
22. 0-10 Volt (option)
23. Room thermostat 2 (option)
24. Ignition and ionization cable
25. Connection for Interface Control Unit (option)
26. 5AT slow-blow fuse (3x) for internal and optional circuits*
27. Modulating pump PWM

* 5AT slow-blow fuse (2x) for internal circuits and connection of CH, DHW and Flame output + 5AT slow-blow fuse (1x) for connection of Alarm, P3 and P4 (connector P14).

2 spare 5AT slow-blow fuses are located on the back side of the electrical box, for fuse replacement, if required.

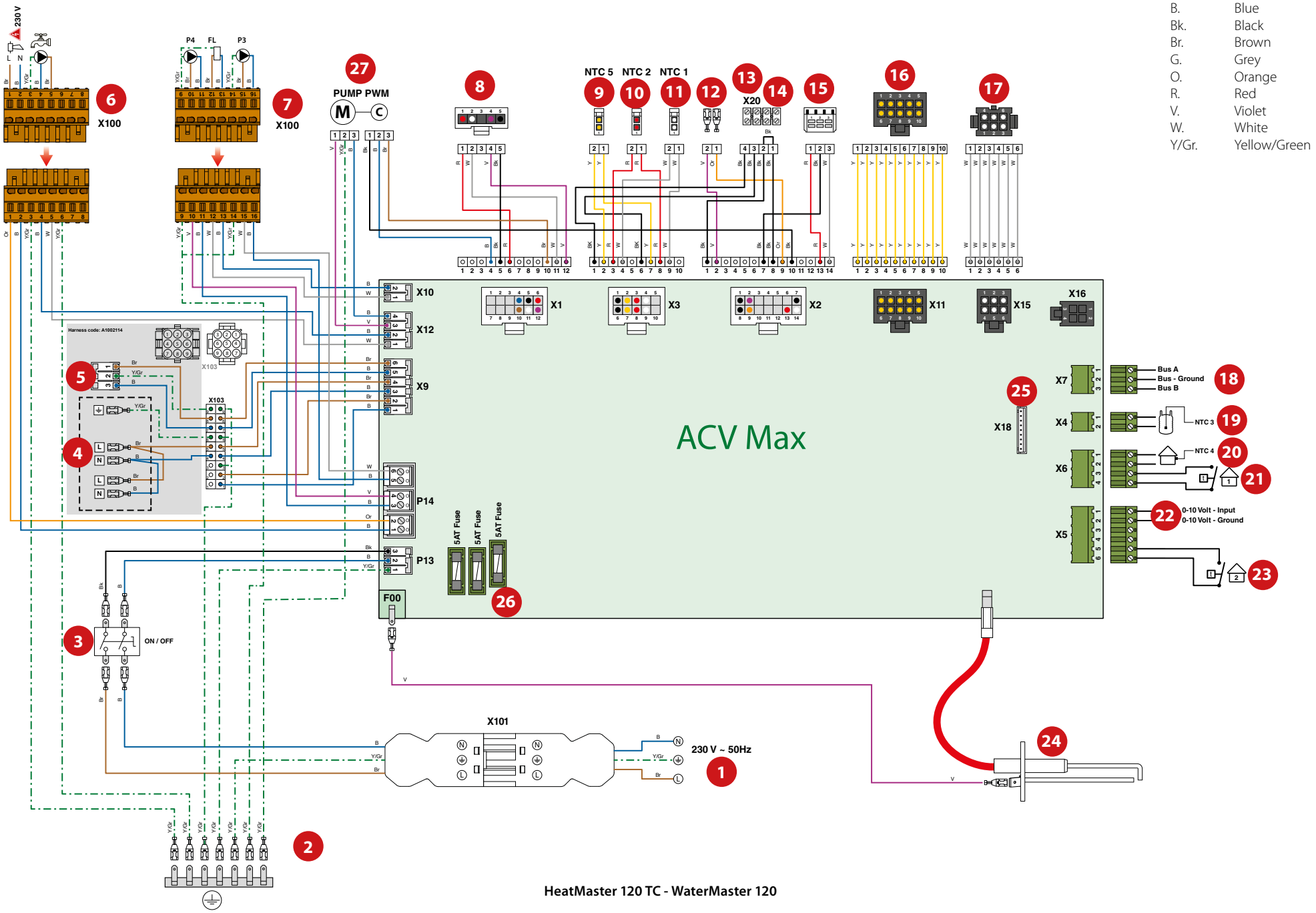
B. Blue
Bk. Black
Br. Brown
G. Grey
O. Orange
R. Red
V. Violet
W. White
Y/Gr. Yellow/Green
230 V
L N
P4 FL P3
X100
PUMP PWM
NTC 5 NTC 2 NTC 1
X20
X10
X12
X9
X1
X3
X2
X11
X15
X16
X7
X4
X6
X5
X18
X103
P14
P13
F00
5AT Fuse
5AT Fuse
5AT Fuse
Harness code: A1002114
ACV Max
Bus A
Bus - Ground
Bus B
NTC 3
NTC 4
0-10 Volt - Input
0-10 Volt - Ground
ON / OFF
X101
230 V ~ 50Hz
HeatMaster 120 TC - WaterMaster 120

ELECTRICAL CHARACTERISTICS HEATMASTER®201

To WD

Main Characteristics			HM 201
Rated voltage		V~	230
Rated frequency		Hz	50
Electrical consumption	Max.	W	525
	Min.	W	210
Electrical consumption at 30% load		W	240
Electrical consumption in standby		W	5
Rated current (Fuse)		A	10
Class		IP	40

Key

1. ON/OFF master switch
2. Gas valve
3. Burner power supply
4. Ground
5. Burner PWM plug
6. NTC2 return sensor
7. NTC1 supply sensor
8. NTC - Low temperature circuit

   In boiler versions produced before mid-2019, please connect wires as follows for low temp circuit operation : black wires from X3, terminals 1 & 6 must be routed to X20, terminals 3 & 4.

9. High limit switch
10. Low water pressure sensor
11. PCB (Display)
12. ACVMax programmation plug
13. A & B Modbus (option)
14. NTC3 DHW sensor
15. NTC4 outdoor temperature sensor (option)
16. Room thermostat 1 (option)
17. 0-10 Volt (option)
18. Room thermostat 2 (option)
19. Ignition and ionization cable
20. Connection for Interface Control Unit (option)
21. 5AT slow-blow fuse (3x) for internal and optional circuits*
22. Terminal block :
    - Line
    - Pump
    - DHW
    - Alarm
    - CH
    - Flame
    - Pump

* 5AT slow-blow fuse (2x) for internal circuits and connection of CH, DHW and Flame output + 5AT slow-blow fuse (1x) for connection of Alarm, P3 and P4 (connector P14).

2 spare 5AT slow-blow fuses are located on the back side of the electrical box, for fuse replacement, if required.

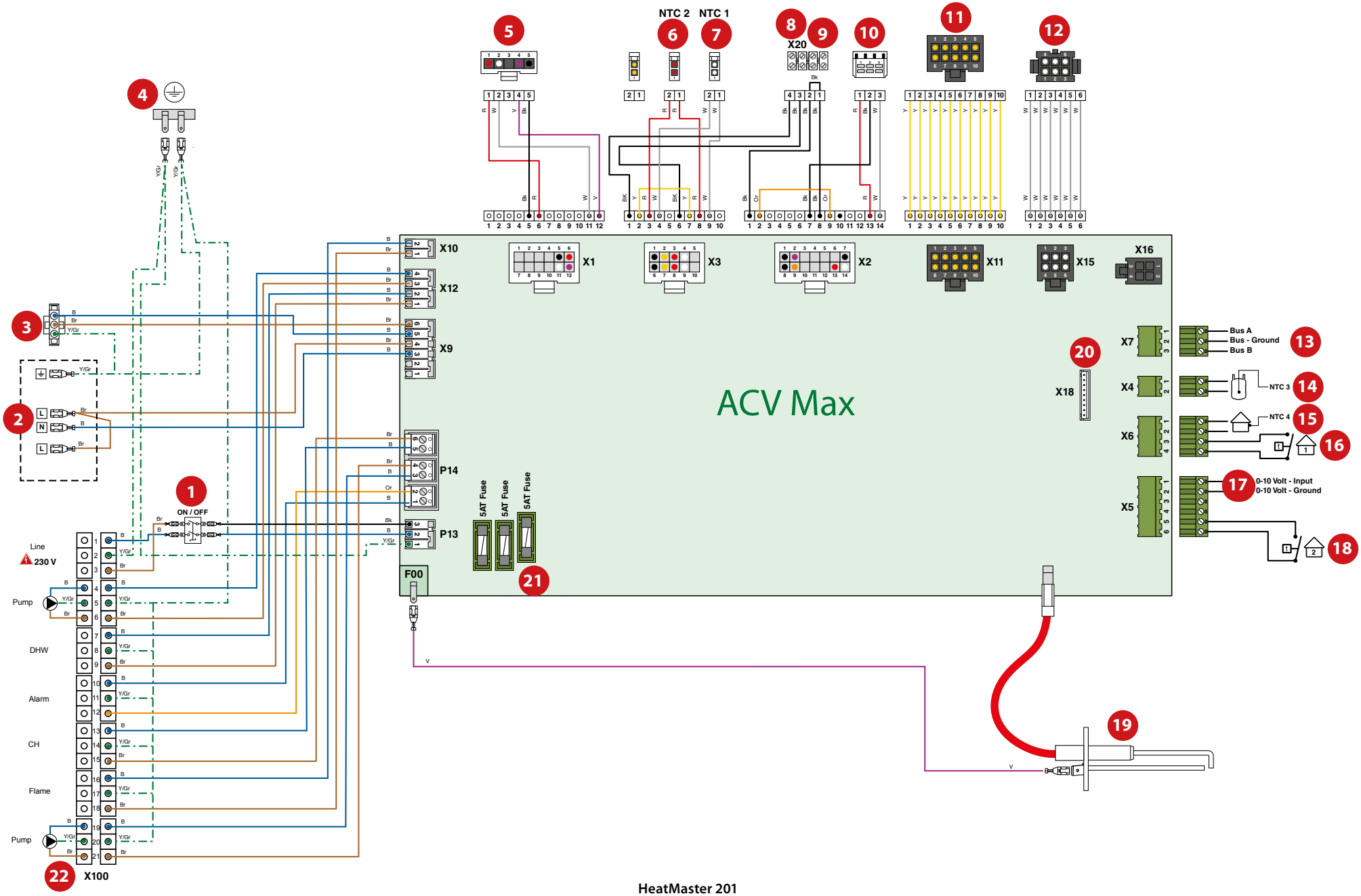

HeatMaster 201

PUMPS (HEATMASTER 25C, 25-35-45-70-85-120TC, 201)

The pump configurator system is based on the demands of the hydraulic system that you design. In the table below, you will find the 4 configurations that have been preset in the ACVMax controller for the HeatMaster 25C, HeatMaster 25-35-45-70-85-120 TC and HeatMaster 201, based on different hydraulic schemes that can be used.

The table shows which relays are activated under which condition.

The names in the table refer to the demand done by CH1 by CH2 or DHW respectively, the demand to open close the Motor of a mixing valve or reflect the activation of the alarm (error) or Flame output relay.

In the following pages, you will find diagrams for HeatMaster C and TC, with a configuration number that corresponds to the setting in the display.

No specific Hydraulic diagram is currently available for the HeatMaster 201.

Config. No	Flex 4 ERR	Flex 6 P4	Flex 3 P3	Flex 2 DHW	Flex 1 CH	Flex 5 FL
5	Error/Flame	CH2	CH1	DHW	CH1/CH2/ DHW	Flame
14	Error/Flame	Mix open	CH1/CH2	CH1	CH1/CH2/ DHW	Mix close
15	Mix open	CH2	CH1/CH2	CH1	CH1/CH2/ DHW	Mix close
16	Error/Flame	CH2	CH1/CH2	CH1	CH1/CH2/ DHW	Flame

PUMPS (WATERMASTER)

The pump configurator system is based on the demands of the hydraulic system that you design. In the table below, you will find the 4 configurations that have been preset in the ACVMax controller for the WaterMaster 25-35-45-70-85-120, BUT only preset Config N° 5 is currently active for the appliance.

The table shows which relays are activated under which condition.

No specific Hydraulic diagram is currently available for the WaterMaster.

Config. No	Flex 4 ERR	Flex 6 P4	Flex 3 P3	Flex 2 DHW	Flex 1 CH	Flex 5 FL
5	Error/Flame	CH2	CH1	DHW	CH1/CH2/ DHW	Flame
14						
15			Not active			
16						

PRESET CONFIGURATION 16

Pump Configuration 16

Config. No	Flex 4 ERR	Flex 6 P4	Flex 3 P3	Flex 2 DHW	Flex 1 CH	Flex 5 FL
16	Error/Flame	CH2	CH1/CH2	CH1	CH1/CH2/ DHW	Flame

High temperature heating circuit, possibly with optional outdoor temperature sensor and room thermostat.

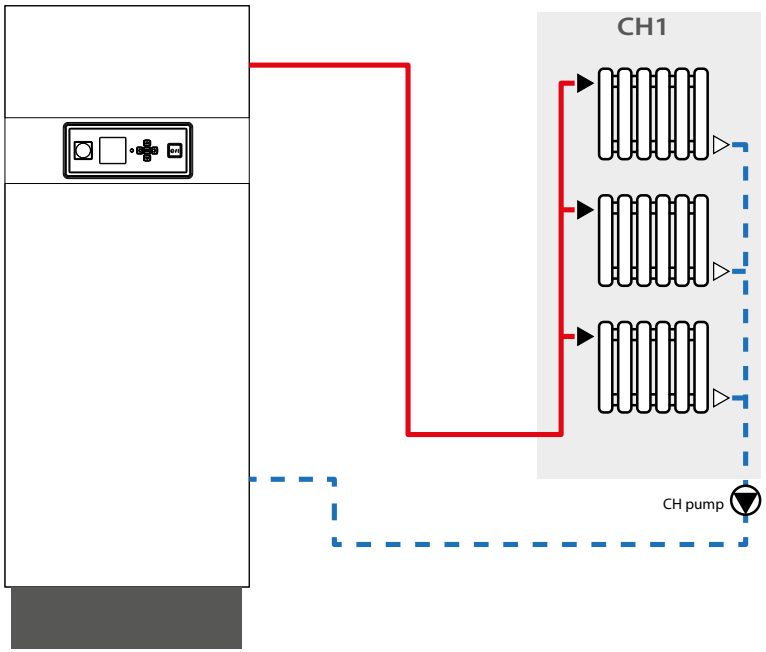

Electrical board terminals	Terminal name --> Connected to	
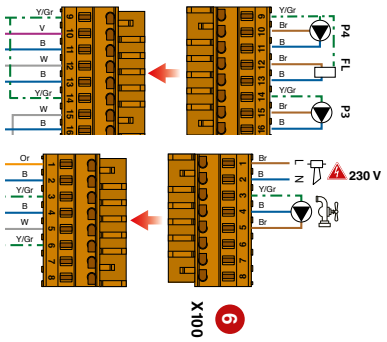	..... P4	--> --
	..... FL	--> Flame sensor
	..... P3	--> --
	..... ERR	--> Error (Alarm)
	..... DHW	--> CH pump (CH1 circuit)

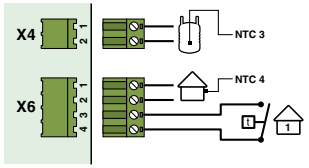

..... DHW sensor (NTC3)

..... Optional outdoor temp. sensor (NTC4)

..... Optional room thermostat 1

ACVMax interface settings using the Installer menu (Installer code needed, see "Installer Code"):

Main Screen	Sub-screen	item	Sub-item	Required selection
		Model		HeatMaster (Pre-Set)
		Pump Settings	Preset Pump Config	Config 16
		Heating Operation		Enabled
		Demand		Thermostat and Outd. curve
		CH2 Circuit		Disabled
		DHW Operation		Enabled
		Demand		Sensor

PRESET CONFIGURATION 16

Pump Configuration 16

Config. No	Flex 4 ERR	Flex 6 P4	Flex 3 P3	Flex 2 DHW	Flex 1 CH	Flex 5 FL
16	Error/Flame	CH2	CH1/CH2	CH1	CH1/CH2/ DHW	Flame

High temperature heating circuits, possibly with optional outdoor temperature sensor and room thermostats.

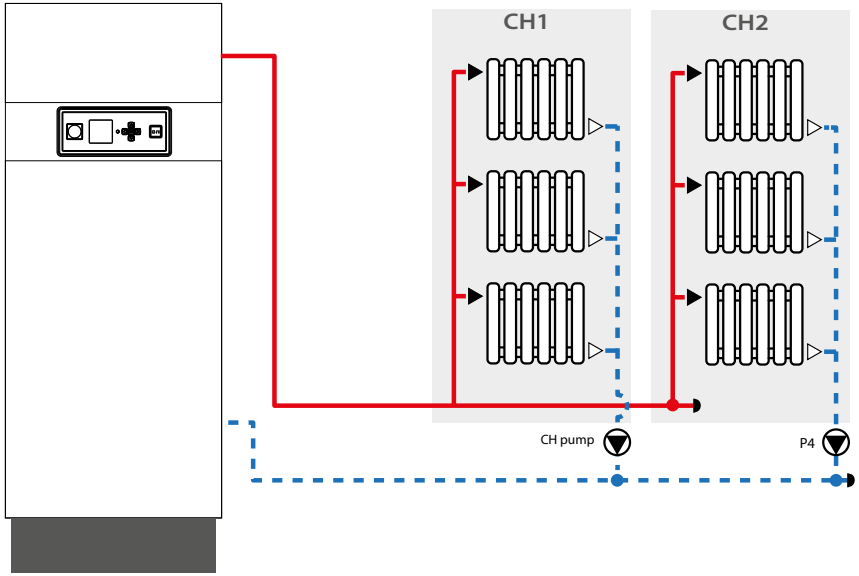

Electrical board terminals	Terminal name --> Connected to	
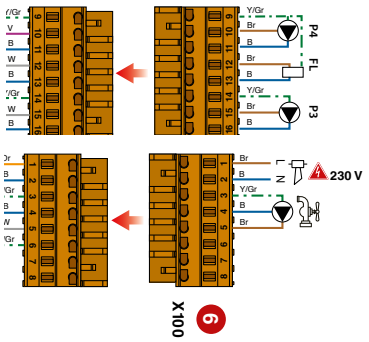	..... P4	--> P4 Pump (CH2 circuit)
	..... FL	--> Flame sensor
	..... P3	--> --
	..... ERR	--> Error (Alarm)
	..... DHW	--> CH pump (CH1 circuit)

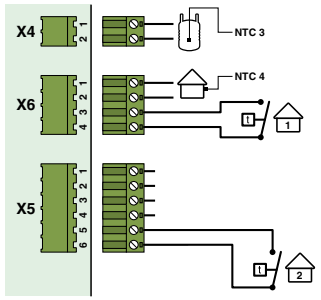

..... DHW sensor (NTC3)

..... Optional outdoor temp. sensor (NTC4)

..... Optional room thermostat 1

..... Optional room thermostat 2

ACVMax interface settings using the Installer menu (Installer code needed, see "Installer Code"):

Main Screen	Sub-screen	item	Sub-item	Required selection
		Model		HeatMaster (Pre-Set)
		Pump Settings	Preset Pump Config	Config16
		Heating Operation		Enabled ( )
		Demand		Thermostat and Outd. curve
		CH2 Circuit		Enabled
		DHW Operation		Enabled ( )
		Demand		Sensor

PRESET CONFIGURATION 15

Pump Configuration 15

Config. No	Flex 4 ERR	Flex 6 P4	Flex 3 P3	Flex 2 DHW	Flex 1 CH	Flex 5 FL
15	Mix open	CH2	CH1/CH2	CH1	CH1/CH2/ DHW	Mix close

High and Low temperature heating circuits, possibly with optional outdoor temperature sensor and room thermostats.

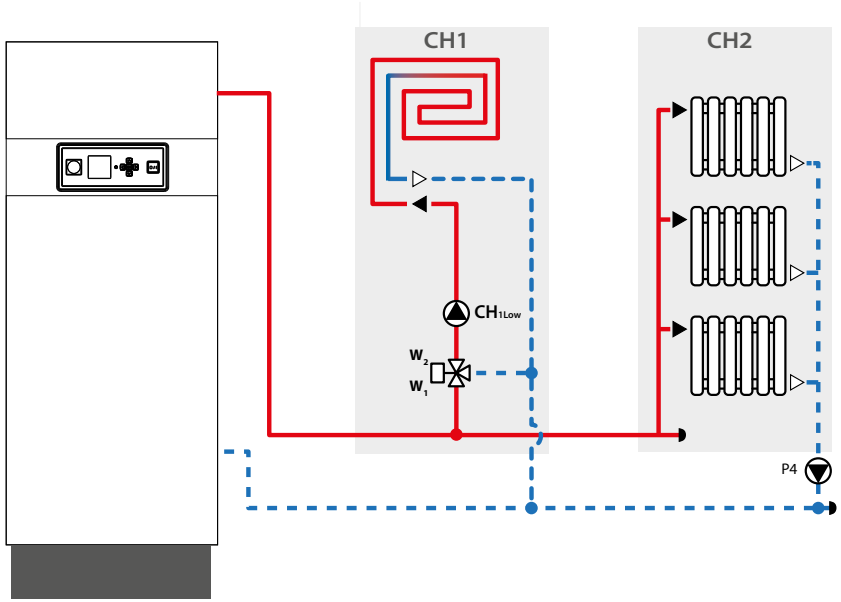

Electrical board terminals	Terminal name --> Connected to
..... P4	--> CH pump (CH2 circuit)
..... FL	--> Motorized 3-way valve CLOSED
..... P3	--> --
..... ERR	--> Motorized 3-way valve OPEN
..... DHW	--> CH1 pump ($CH1_{low}$)

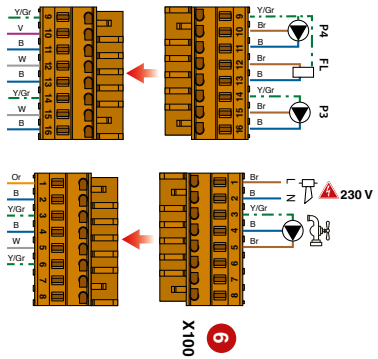

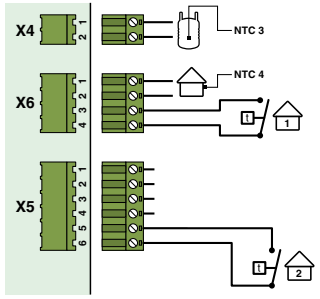

..... DHW sensor (NTC3)

..... Optional outdoor temp. sensor (NTC4)

..... Optional room thermostat 1

..... Optional room thermostat 2

ACVMax interface settings using the Installer menu (Installer code needed, see "Installer Code"):

Main Screen	Sub-screen	item	Sub-item	Required selection
		Model		HeatMaster (Pre-Set)
		Pump Settings	Preset Pump Config	Config15
		Heating Operation		Enabled
		Demand		Thermostat and Outd. curve
		CH2 Circuit		Enabled
		DHW Operation		Enabled
		Demand		Sensor

PRESET CONFIGURATION 15

Pump Configuration 15

Config. No	Flex 4 ERR	Flex 6 P4	Flex 3 P3	Flex 2 DHW	Flex 1 CH	Flex 5 FL
15	Mix open	CH2	CH1/CH2	CH1	CH1/CH2/ DHW	Mix close

High and Low temperature heating circuits, possibly with optional outdoor temperature sensor and room thermostats.

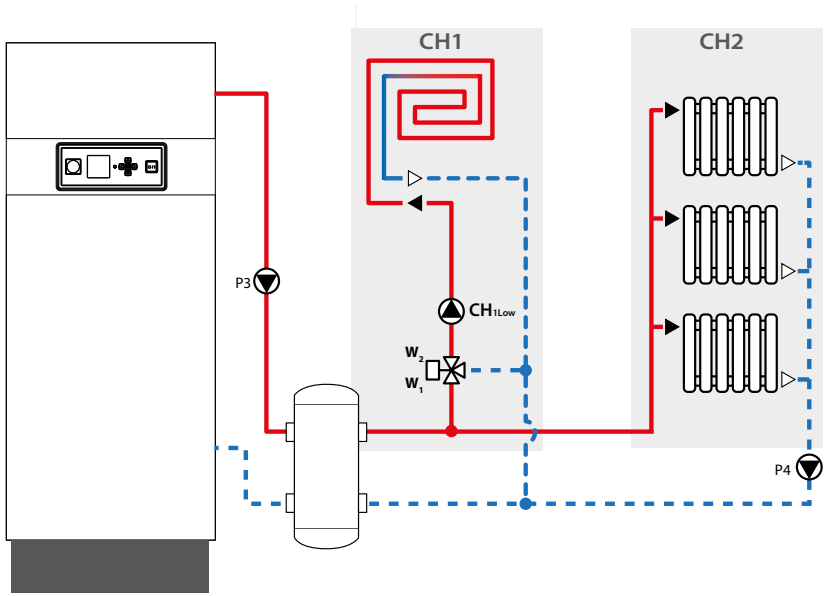

Electrical board terminals	Terminal name --> Connected to	
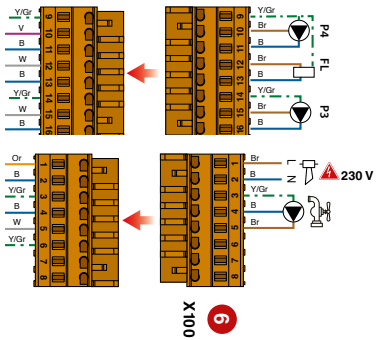	..... P4	--> P4 Pump (CH2 circuit)
	..... FL	--> Motorized 3-way valve CLOSE
	..... P3	--> P3 pump (CH1 and CH2)
	..... ERR	--> Motorized 3-way valve OPEN
	..... DHW	--> CH pump ($CH1_{low}$)
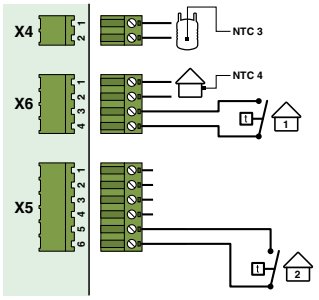	..... DHW sensor (NTC3)	
	..... Optional outdoor temp. sensor (NTC4)	
	..... Optional room thermostat 1	
	..... Optional room thermostat 2	

ACVMax interface settings using the Installer menu (Installer code needed, see "Installer Code"):

Main Screen	Sub-screen	item	Sub-item	Required selection
		Model		HeatMaster (Pre-Set)
		Pump Settings	Preset Pump Config	Config15
		Heating Operation		Enabled
		Demand		Thermostat and Outd. curve
		CH2 Circuit		Enabled
		DHW Operation		Enabled
		Demand		Sensor

THE INSTALLER'S HANDBOOK FOR HEATING SYSTEMS CONTROLLED WITH ACVMAX

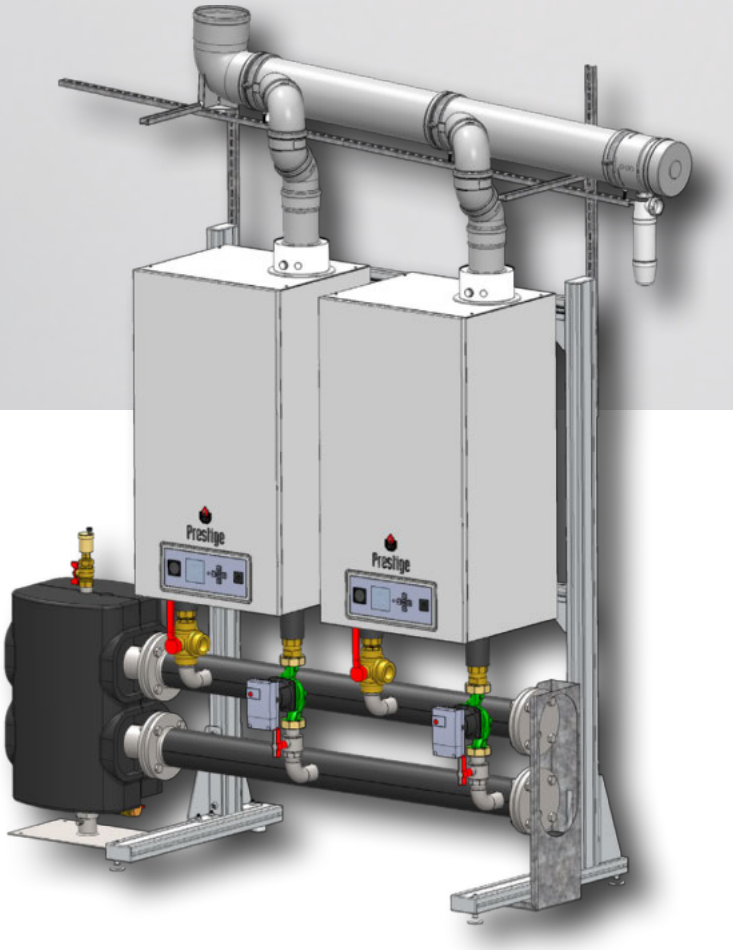

VOLUME 3
Cascade Systems

Prestige 42 - 50 - 75 - 100 - 120 Solo

Applicable to appliances manufactured from March 2019, equipped with at least software version (DSP) 4.04

EXCELLENCE IN HOT WATER ACV

VOLUME 3 - CASCADE SYSTEMS

GENERAL INFORMATION 3-3
User's Guide 3-3
Operating Principles of an ACVMax-Controlled Cascade 3-3
MENUS AND SCREENS DESCRIPTION 3-4
Cascade Menu ( ) -->> Cascade Information ( ) 3-4
Cascade Menu ( ) -->> Cascade Settings ( ) 3-5
Cascade ( ) -->> Cascade Autodetection ( ) 3-9
Structure of the ACVMax cascade menu 3-10
INSTALLATION OF THE CASCADE BOILERS 3-11
General process for cascade installation 3-11
INSTALLATION AND CONFIGURATION OF CASCADE SYSTEMS 3-12
Assembling the Cascade Mounting rack 3-12
Hydraulic connections of Cascade Systems 3-14
Chimney connections of Cascade Systems 3-16
Cascade system connection (4-boiler Cascade) 3-18
Cascade start-up process 3-19
Accessing the Cascade Autodetection page 3-19
Preset Configuration 2 3-20
3-boiler cascade configuration, high temperature, with DHW circuit 3-20
3-boiler cascade configuration, high temperature, with DHW circuit 3-22
Preset Configuration 5 3-24
3-boiler cascade configuration, with two high temperature heating circuits and DHW circuit 3-24

USER'S GUIDE

This section contains information on the cascade systems, i.e. a description of the ACVMax menus and screens, as well as how to connect several boilers in a cascade (hydraulics, chimney and electrical connections). It also presents several hydraulic diagrams and the ACVMax controller set-up for cascade systems (Prestige 42-50-75-100-120 Solo boilers).

The connections are made using specific kits that are detailed hereafter.

This manual explains the complete installation of a cascade using the rack mounting kit. However, a cascade can also be built using a Prestige box. For more information, please contact your ACV representative.

For any cascade system that is not mentioned in this manual, please contact your ACV representative.

OPERATING PRINCIPLES OF AN ACVMAX-CONTROLLED CASCADE

Prestige Solo boilers can be setup in a cascade configuration (max. 4 boilers) that is controlled by the ACVMax Boiler Control System.

The boilers can operate together without the need for an external cascade controller. One Prestige will be selected as the Master and will be wired to accept all the low voltage control signals and all the system pumps. The Master appliance organizes the distribution of the heat demands over the appliances in the cascade

The other Prestige boilers will be designated as Slaves and will only have a communication cable connecting them to the other boilers in the Cascade System.

The CH heat demands follow the same logic as the heat demands in a single appliance: the target setpoint at first start-up is calculated, following a temperature rise of 4K/min. The start-up sequence calculates the desired capacity according to the target setpoint.

The first appliance starts and as soon as it reaches twice the minimum capacity of the appliance, the second appliance will be started when the stage delay has expired. Both appliances are then running at minimum capacity.

The capacity increase continues following the rise of the calculated target setpoint. The third appliance will be started as soon as the two appliances have reached 3 times the minimum capacity. The cascading strategy is to have as many running appliances as possible.

The control parameters to determine the control speed of the cascade is derived from the individual appliance capacity parameter.

As soon as the system temperature comes in reach of the target system temperature the capacity increase will stop and the normal temperature control takes over.

Be aware that in a cascade the temperature control is done on the system temperature and NOT on the local temperature. That means that the local temperature can be easily 5 to 7 K higher than the system temperature depending on the position of the system sensor.

The local temperature is limited by the absolute max. local CH flow temperature.

The Cascade control works as a power control on the local appliances. The system temperature is the parameter to regulate and the local temperatures are of no avail, they are only used to limit the local power in case the max. temperature is reached.

Additional characteristics :

- The Cascade function allows up to four identical Prestige boilers to operate together in a single heating system.
- Parallel Modulation fires as many boilers as possible to maximize system efficiency.
- The Auto rotation function rotates the lead boiler every time a call for heat is received when a Thermostat option is chosen in CH Demand or every 24 hours when a Constant option is chosen in CH Demand.

Cascade Menu ( ) -->> Cascade Information ( )

"Installer Code"

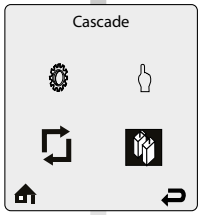

To navigate on the screen, use the **UP**, **DOWN**, **LEFT** and **RIGHT** keys, then the **OK** key to validate a selection. To increase/decrease values, use the **UP** and **DOWN** keys. or **LEFT** and **RIGHT**, according to the situation

Cascade Info provides real time operating information of the Cascade System. Each line contains an information item followed by its current value.

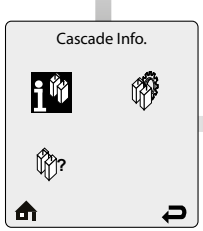

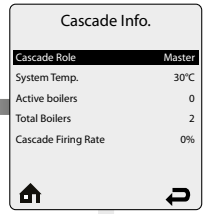

Cascade Info provides the following information item:

- **Cascade Role** - Displays the current role of the Prestige in the Cascade System. Cascade Role will be one of the following:
  - **Master** – Indicates this Prestige is the Master boiler in the Cascade System.
  - **Slave** – Indicates this Prestige is a Slave boiler in the Cascade System.
  - **Standalone** – Indicates this Prestige is not part of a Cascade System.
- **System Temp -** See description below.
- **Active boilers** - Displays the current number of boilers fired in the Cascade System
- **Total Boilers** - Displays the total number of boilers in the Cascade System.
- **Cascade Firing Rate** - Displays the current firing rate of the entire Cascade System.

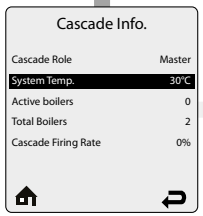

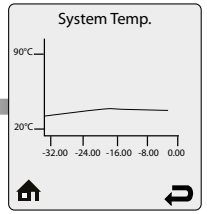

System Temp. - Displays the current system temperature reading on the Master boiler. If the system sensor is not wired in to the Master boiler, the Master boiler supply temperature is displayed. It has a logging function which records one sample every 12 minutes to produce a graph of the last 24 hours.

Select **System Temp.** in Cascade Info. then press the **OK** button to view the graph.

Cascade Menu ( ) -->> Cascade Settings ( )

"Installer Code"

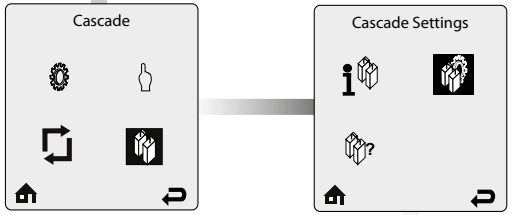

The **Cascade Settings** menu contains settings related to cascade operation. Each line contains a Cascade Setting followed by its current value. Six Cascade Settings are displayed on the screen at one time.

Press the **UP** or **DOWN** buttons to scroll through additional Cascade Settings.

Cascade Setting changes must be made on the cascade Master. Cascade autodetection must be performed after making any changes to a cascade Setting before the change will take effect.

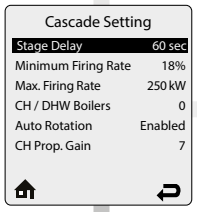

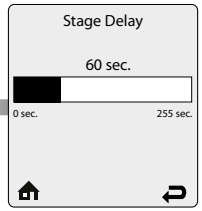

Stage Delay sets the time delay before enabling or disabling a boiler in the Cascade System. The Stage Delay begins once the Master boiler determines that a boiler must be enabled to reach the setpoint or when the Master boiler determines a boiler should be disabled because of a decreasing load.

Press the **LEFT** or **RIGHT** buttons to adjust the time then press the **OK** button to store the setting.

Adjusting the Stage Delay will have the following effects:

- **Increasing Stage delay**
  - Reaching the setpoint could take longer due to a longer delay between enabling boilers.
  - Overshooting the setpoint could occur due to boilers staying on longer before being disabled.
- **Decreasing Stage delay**
  - Overshooting the setpoint could occur due to boilers being enabled quicker.
  - Boilers will be disabled quicker, possibly increasing boiler cycling and decreasing runtimes.

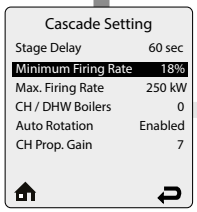

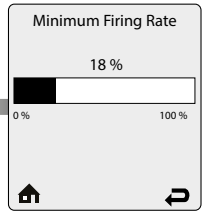

Minimum Firing Rate is the minimum firing rate of a single boiler in the Cascade System. The Master boiler uses this setting to determine when boilers can be enabled and disabled.

Setting the Minimum Firing Rate below the recommended minimum will result in boilers being enabled too quickly which may cause sharp increases in temperature from the Cascade System.

Setting the Minimum Firing Rate above the recommended minimum will delay the enabling of boilers which may lower the system efficiency.

Press the **LEFT** or **RIGHT** buttons to adjust the Minimum Firing Rate then press the **OK** button to store the setting.

Default : 18%

Only make changes after being instructed to do so by ACV as changing of this value may cause instability in the appliance cascade control.

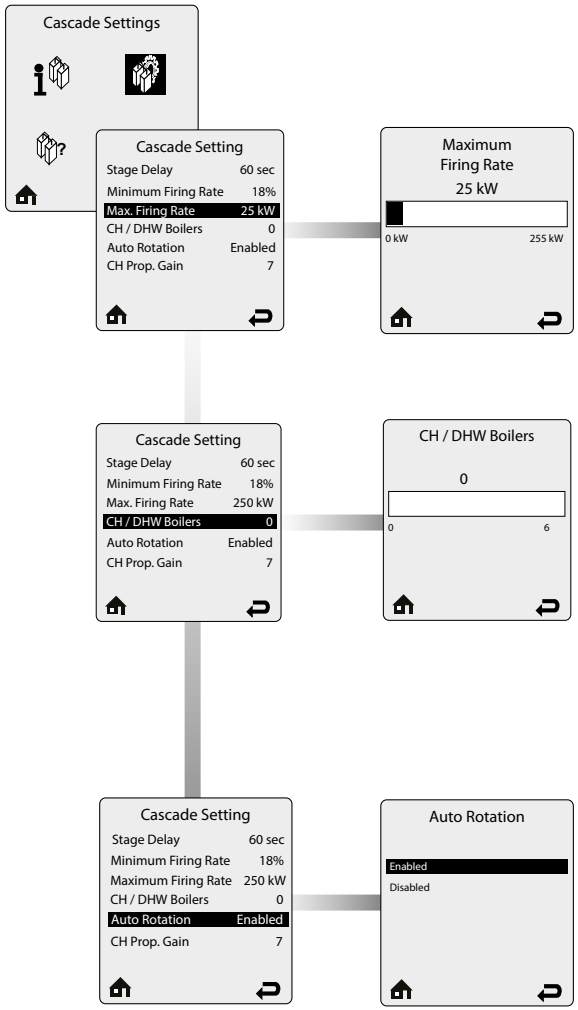

Maximum Firing Rate is the maximum capacity of a single boiler in the Cascade System.
Press the **LEFT** or **RIGHT** buttons to adjust the Maximum Firing Rate then press the **OK** button to store the setting.

This value, expressed in kW, will correspond to the current appliance range.

Default: according to the boilers

Stable cascade operation requires that all boilers in a cascade System be the same size. Mixing boiler sizes in a cascade System could lead to temperature fluctuations and erratic cascade operation.

The **CH or DHW Boilers** setting specifies how many boilers in a Split Cascade System will respond to a domestic hot water call.

The CH or DHW Boilers always include the Master boiler. The remaining boilers will only respond to central heating calls. This allows the Cascade System to satisfy both central heating and domestic hot water calls at the same time. At the completion of a domestic hot water call, the CH or DHW Boilers will again be available to respond to central heating calls.

Press the **LEFT** or **RIGHT** buttons to adjust the CH or DHW Boilers setting then press the **OK** button to store the setting

The maximum number of boilers in a cascade is 4. Therefore, do not select a higher number than 3 in this menu as one should never adjust to the same number as he has appliances in the cascade. This would override the Split of the system. Failure to comply may result in faults in the cascade operation.

Through the **Auto Rotation** function**,** the number of burning hours is equalized over all appliances.

When the function is **Enabled**, the appliances will all run an equal amount of time. This helps balancing wear over the appliances.

When the function is **Disabled**, there is no levelling of burning hours and the first appliances in the sequence will run more than the last one in the sequence.

Press the **UP** or **DOWN** buttons to enable or disable the function, then on **OK** to validate your selection.

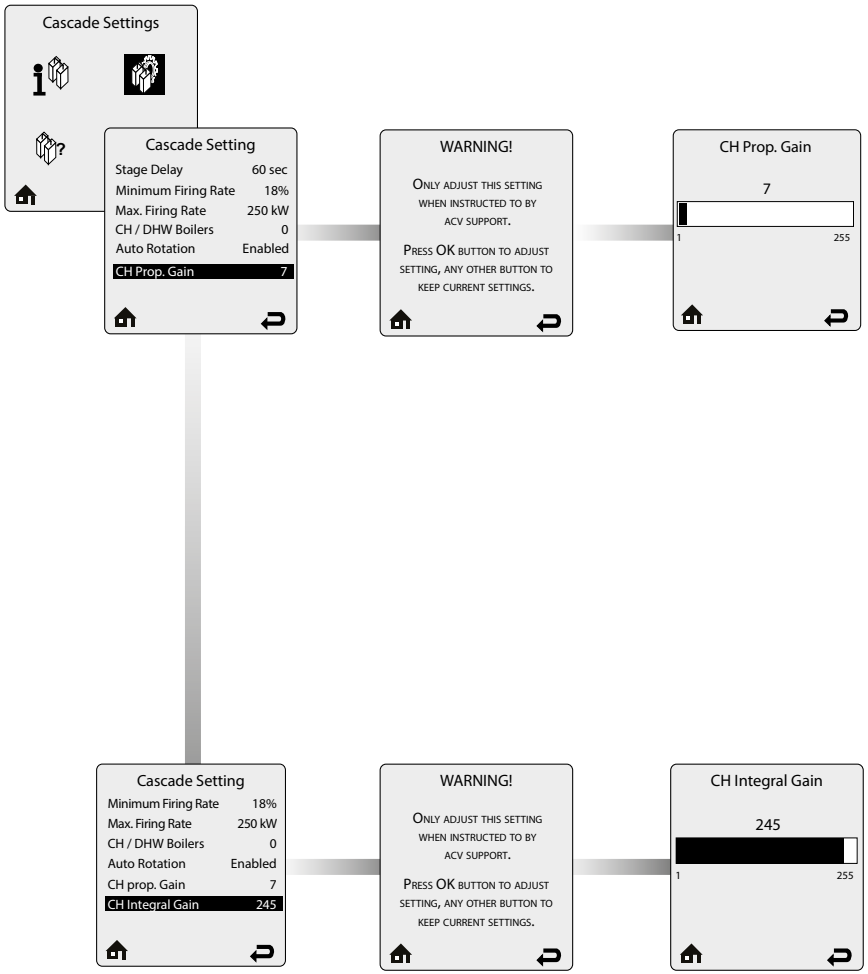

CH Proportional Gain allows the cascade response to be adjusted for a central heating call. CH Proportional Gain has the greatest influence when the system temperature is far away from the setpoint**.**

Press the **LEFT** or **RIGHT** buttons to adjust the CH Proportional Gain then press the **OK** button to store the setting.

- **Increase CH Proportional Gain**
  - The Cascade System will reach setpoint faster, but overshooting the setpoint may occur.
  - To reach the setpoint faster, increase the CH Proportional Gain value by 2. Perform Cascade Autodetection and initiate a central heating call. Observe the cascade response and make further adjustments if necessary..
- **Decrease CH Proportional Gain**
  - The Cascade System will take longer to reach the setpoint, but setpoint overshooting is minimized.
  - If the setpoint is reached too quickly, decrease the CH Proportional Gain value by 2. Perform Cascade Autodetection and initiate a central heating call. Observe the cascade response and make further adjustments if necessary

Default: 7

Please consult ACV's technical Support before making any adjustments. Improper adjustment of CH Proportional Gain could lead to temperature fluctuations and erratic cascade operation.

CH Integral Gain allows the cascade response to be adjusted for a central heating call. CH Integral Gain has the greatest influence when the system temperature is close to the setpoint.

Press the **LEFT** or **RIGHT** buttons to adjust the CH Integral Gain then press the **OK** button to store the setting.

- **Increase CH Integral Gain**
  - The Cascade System will take longer to reach the setpoint, but setpoint overshooting is minimized.
  - If the setpoint is reached too quickly, increase the CH Integral Gain value by 2. Perform Cascade Autodetection and initiate a central heating call. Observe the cascade response and make further adjustments if necessary.
- **Decrease CH Integral Gain**
  - The Cascade System will reach setpoint faster, but overshooting the setpoint may occur.
  - To reach the setpoint faster, decrease the CH Integral Gain value by 2. Perform Cascade Autodetection and initiate a central heating call. Observe the cascade response and make further adjustments if necessary

Default: 245

Please consult ACV's technical Support before making any adjustments. Improper adjustment of CH Integral Gain could lead to temperature fluctuations and erratic cascade operation.

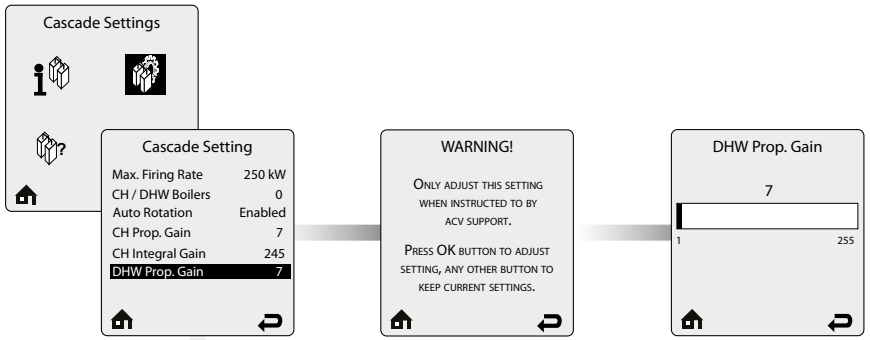

DHW Proportional Gain allows the cascade response to be adjusted for a domestic hot water call. DHW Proportional Gain has the greatest influence when the system temperature is far away from the setpoint.

Press the **LEFT** or **RIGHT** buttons to adjust the DHW Proportional Gain then press the **OK** button to store the setting.

- **Increase DHW Proportional Gain**
  - The Cascade System will reach setpoint faster, but overshooting the setpoint may occur.
  - To reach the setpoint faster, increase the DHW Proportional Gain value by 2. Perform Cascade Autodetection and initiate a domestic hot water call. Observe the cascade response and make further adjustments if necessary.
- **Decrease DHW Proportional Gain**
  - The Cascade System will take longer to reach the setpoint, but setpoint overshooting is minimized.
  - If the setpoint is reached too quickly, decrease the DHW Proportional Gain value by 2. Perform Cascade Autodetection and initiate a domestic hot water call. Observe the cascade response and make further adjustments if necessary.

Default: 7

Please consult ACV's technical Support before making any adjustments. Improper adjustment of DHW Proportional Gain could lead to temperature fluctuations and erratic cascade operation.

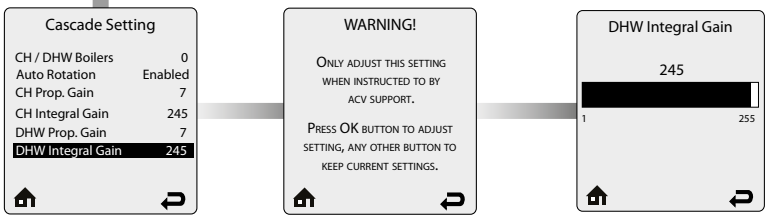

DHW Integral Gain allows the cascade response to be adjusted for a domestic hot water call. DHW Integral Gain has the greatest influence when the system temperature is close to the setpoint.

Press the **LEFT** or **RIGHT** buttons to adjust the DHW Integral Gain then press the **OK** button to store the setting.

- **Increase DHW Integral Gain**
  - The Cascade System will take longer to reach the setpoint, but setpoint overshooting is minimized.
  - If the setpoint is reached too quickly, increase the DHW Integral Gain value by 2. Perform Cascade Autodetection and initiate a omestic hot water call. Observe the cascade response and make further adjustments if necessary.
- **Decrease DHW Integral Gain**
  - The Cascade System will reach setpoint faster, but overshooting the setpoint may occur.
  - To reach the setpoint faster, decrease the DHW Integral Gain value by 2. Perform Cascade Autodetection and initiate a domestic hot water call. Observe the cascade response and make further adjustments if necessary

Default: 245

Please consult ACV's technical Support before making any adjustments. Improper adjustment of DHW Integral Gain could lead to temperature fluctuations and erratic cascade operation.

Cascade ( ) -->> Cascade Autodetection ( )

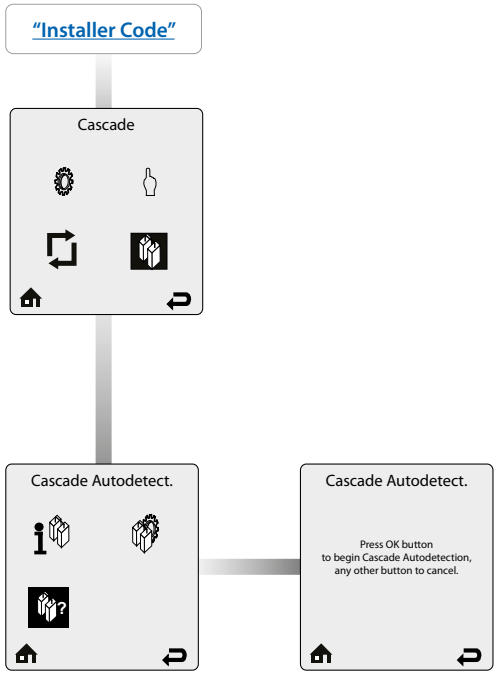

The Cascade System must be configured after wiring is completed and any required adjustments are made in Cascade Settings. Refer to "Cascade system connection (4-boiler Cascade)" before using this function.

The **Cascade Autodetection** function automatically finds and configures all boilers in the Cascade System. This eliminates the need to manually configure each boiler of the Cascade System. Select Cascade Autodetection on the Master boiler then follow the on-screen instructions to perform Cascade Autodetection.

Once **Cascade Autodetection** is finished, a message will be displayed indicating how many boilers have been found. If the number of boilers found is correct, press **OK** to finish Cascade Autodetection.

If the number of boilers found is not correct, check the cascade communication cables between the boilers and repeat **Cascade Autodetection** process.

STRUCTURE OF THE ACVMAX CASCADE MENU

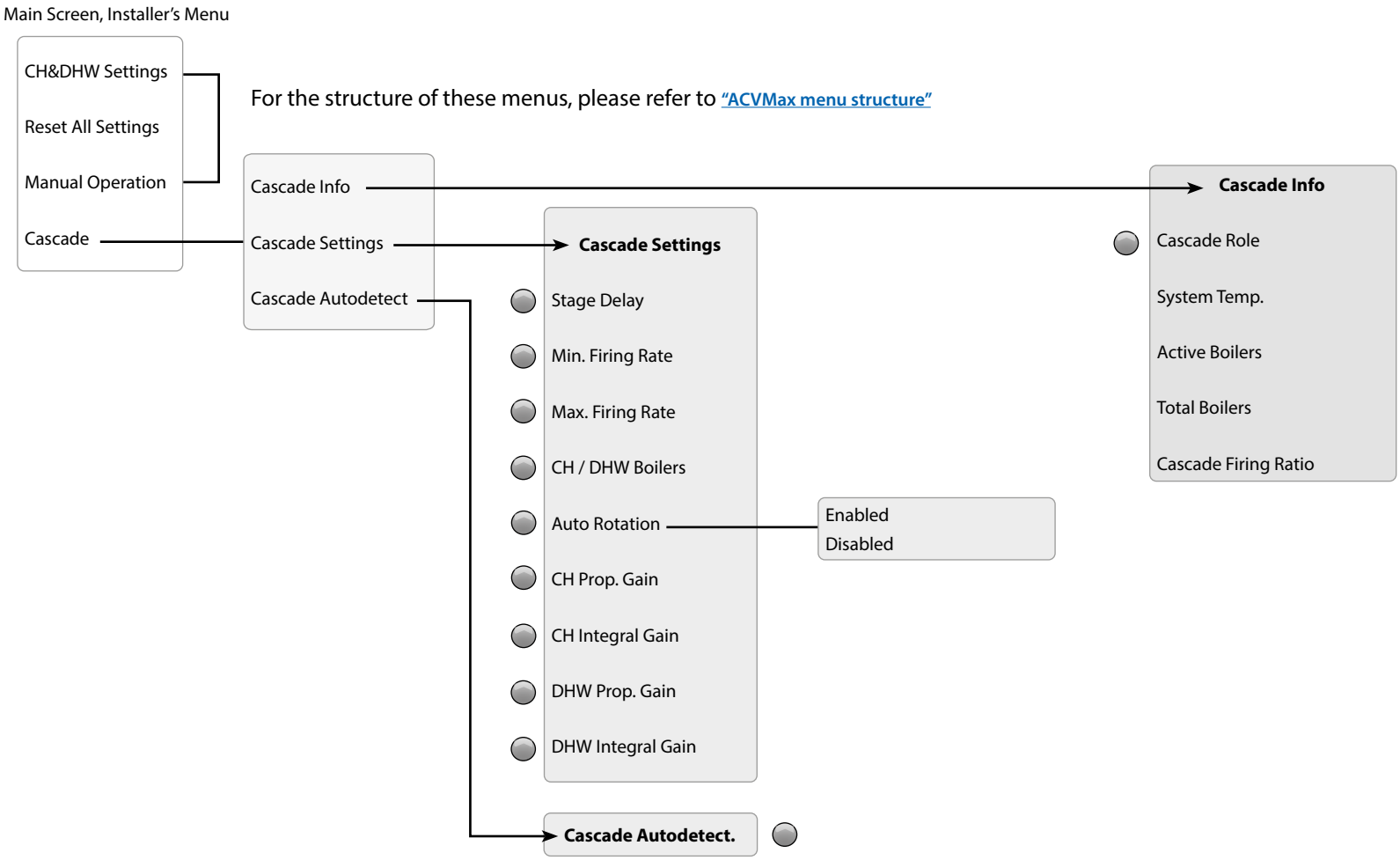

GENERAL PROCESS FOR CASCADE INSTALLATION

1. Define the number of boilers in the cascade (2 to 4).
2. Prepare a cascade mounting rack of the appropriate size, refer to **"Assembling the Cascade Mounting rack"**.
3. Install the boilers on the rack using the mounting support of each boiler.
4. Define which boiler will be the Master.
5. Perform the hydraulic connections of the boilers, refer to **"Hydraulic connections of Cascade Systems"**.
6. Perform the chimney connections of the boilers, refer to **"Chimney connections of Cascade Systems"**.
7. Perform the electrical connection of the Master boiler, refer to **"Cascade system connection (4-boiler Cascade)"**:
   - Connect the Cascade wiring
   - Connect Heat demand input, outdoors sensor
   - Connect the system sensor
   - Connect the DHW sensor
   - Connect all the system pumps
8. Perform the electrical set up of the Slave boiler(s):
   - Connect Cascade wiring
   - Connect appliance pump
9. Start the system, refer to **"Cascade start-up process"**.

ASSEMBLING THE CASCADE MOUNTING RACK

The steps in the following procedures are indicated by black circles with a white number (1).

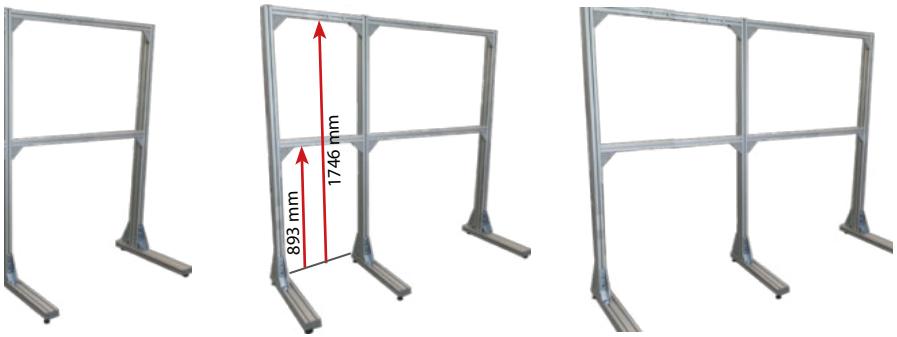

2 boilers 3 boilers 4 boilers

1. Mounting the feet

Required material

Procedure (x2 for each foot)

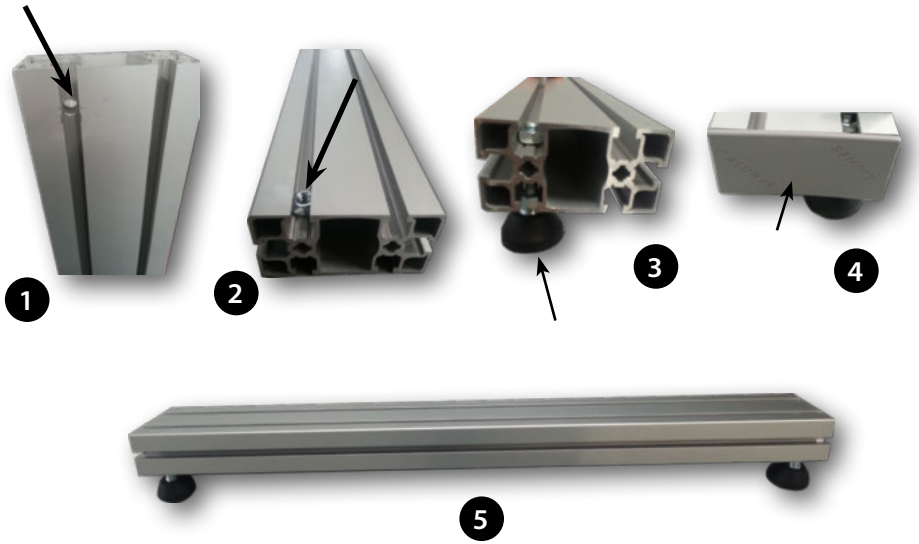

2. Mounting the vertical profiles and connecting them to the feet

Required material

Procedure (x3 for the configuration on the left)

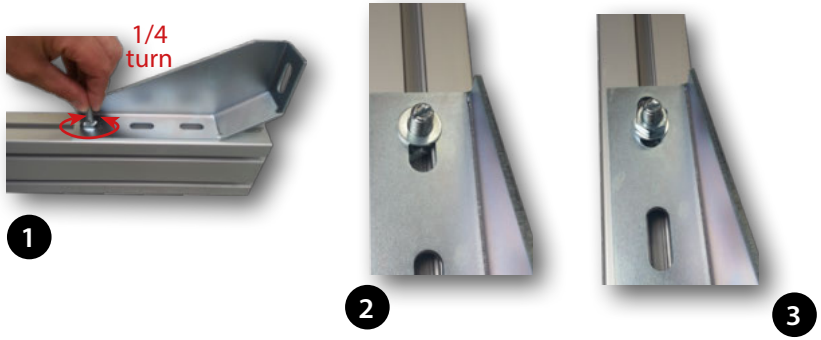

3. Mounting the horizontal profiles and connecting them to the vertical ones

Required material

Procedure (x2 for each horizontal profile)

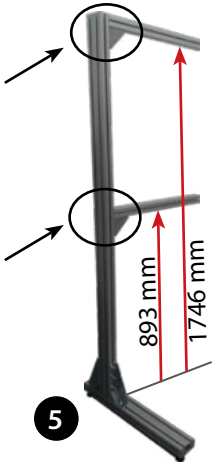

4. Installing the clips to install the boiler mounting support

Required material

Procedure

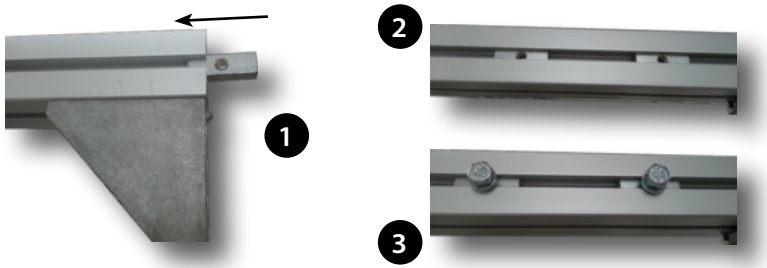

Boiler support bracket, provided with the boiler

HYDRAULIC CONNECTIONS OF CASCADE SYSTEMS

1. Mounting the pumps on the return connections

Required material

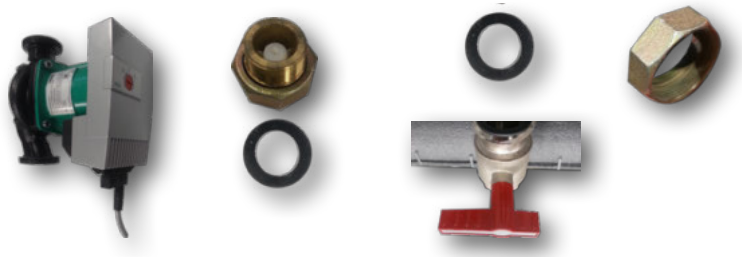

Procedure

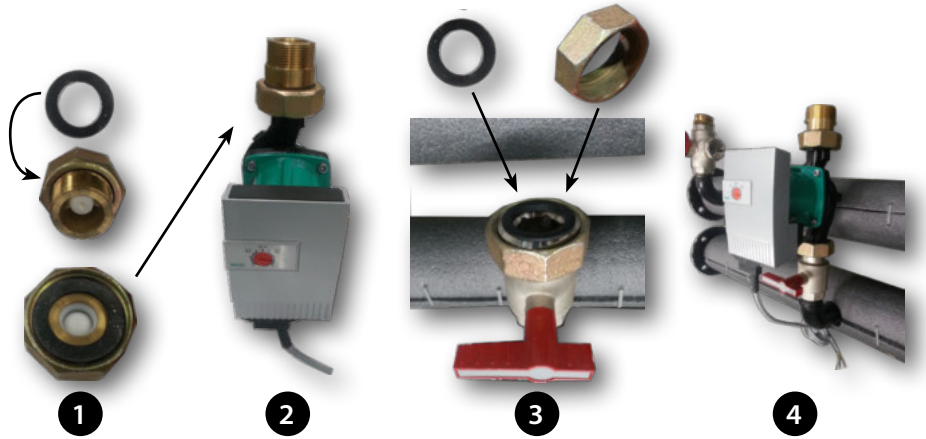

2. Mounting the foot on the heating ramp

Required material

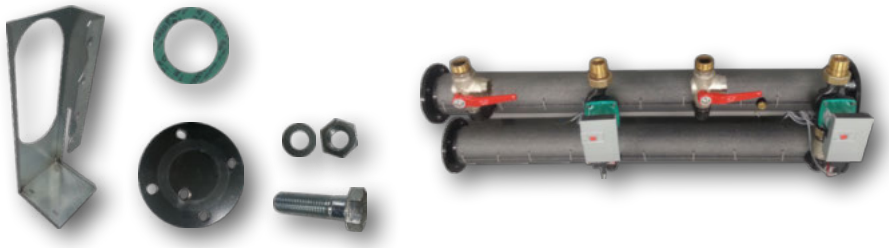

Procedure

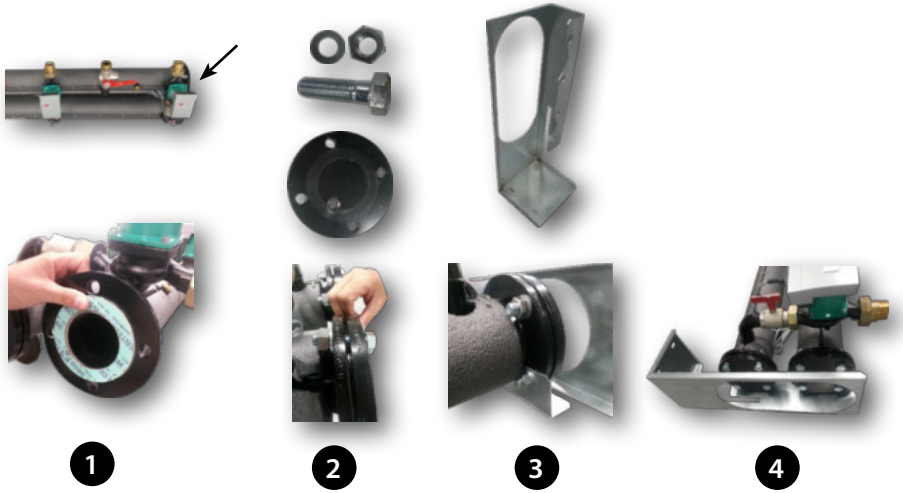

3. Mounting the heating ramp on the boilers

Required material

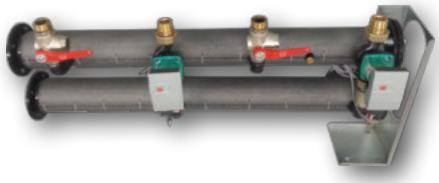

Procedure

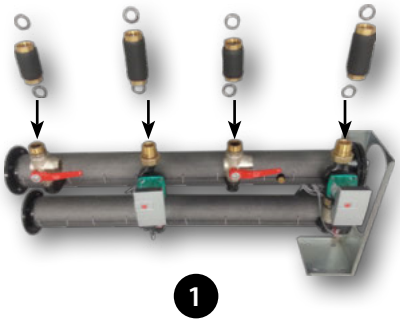

4. Mounting the balance header on the system

Required material

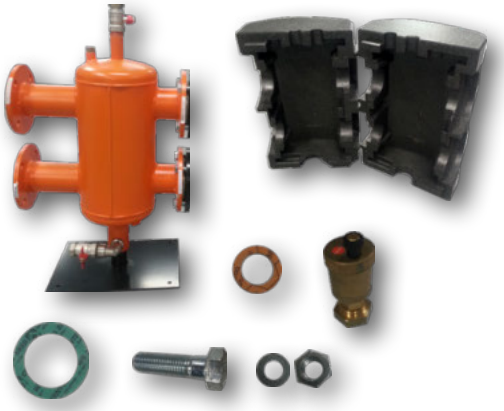

Procedure

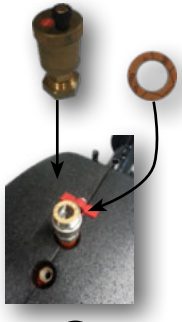

1 2 3

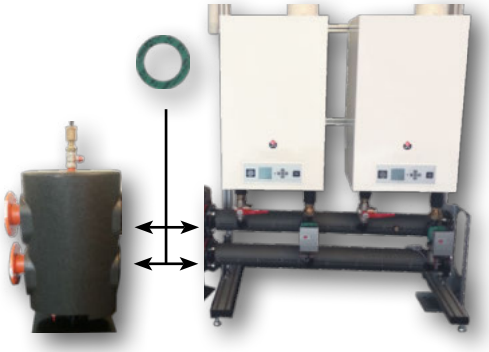

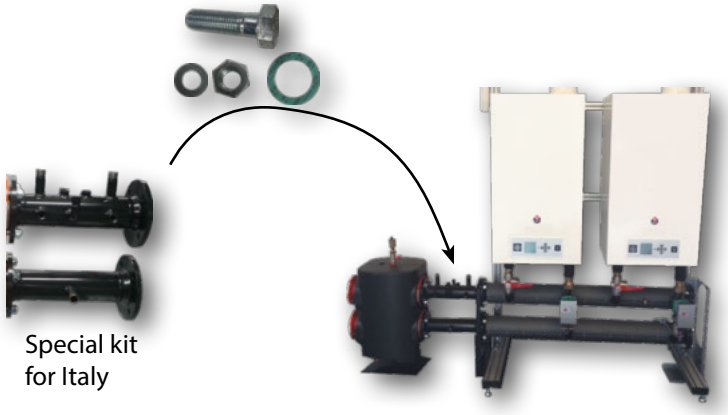

Special kit
for Italy

CHIMNEY CONNECTIONS OF CASCADE SYSTEMS

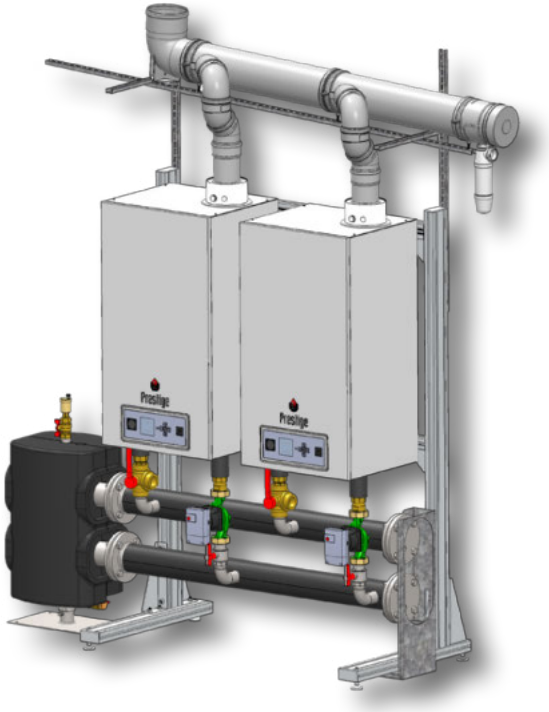

2. Mounting the pipe supporting rack (2 boiler cascade)

Required material

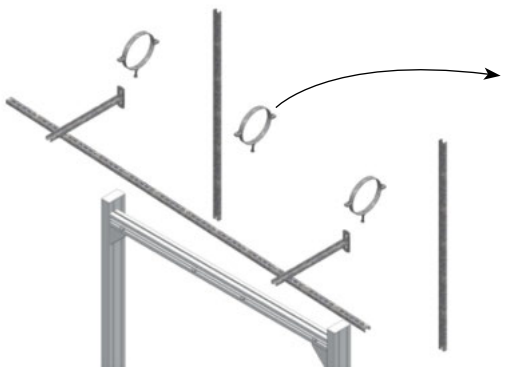

2 pipe brackets are provided with each straight flue pipe.

Procedure

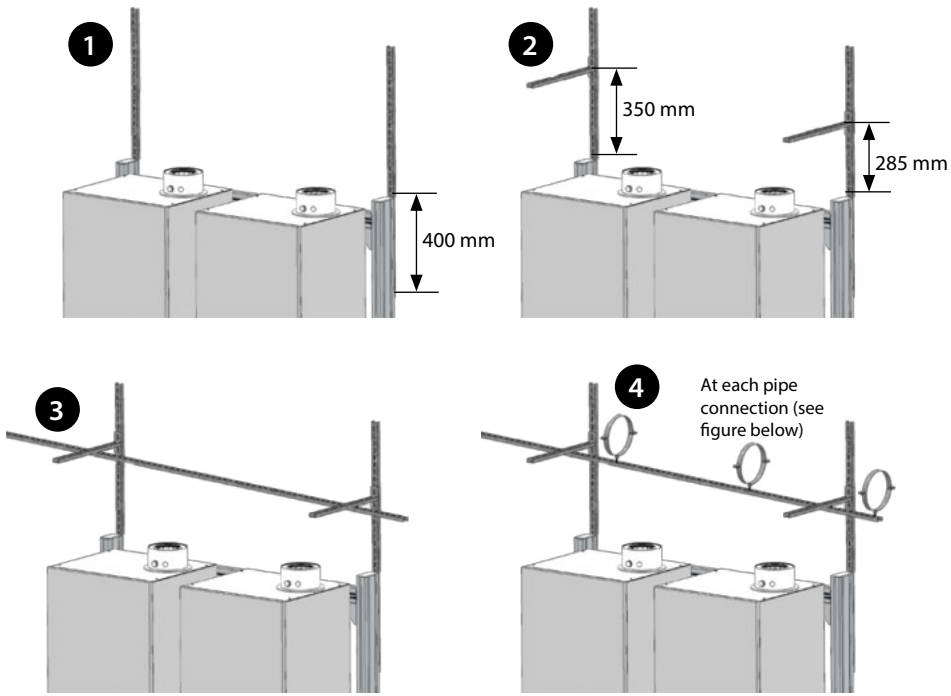

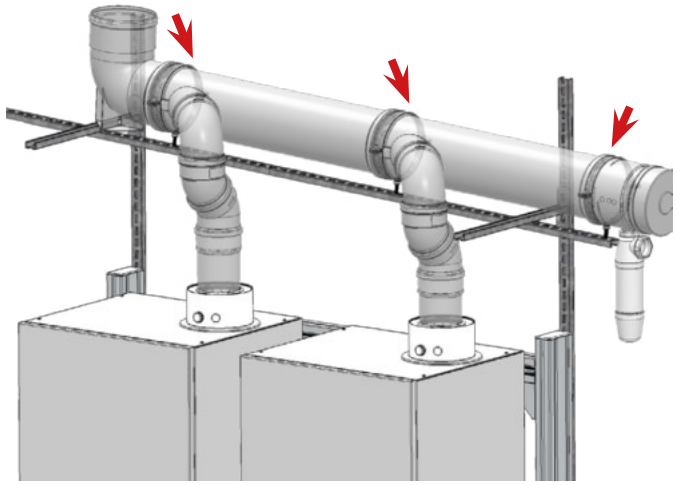

2. Mounting the flue pipes on the boilers

Required material

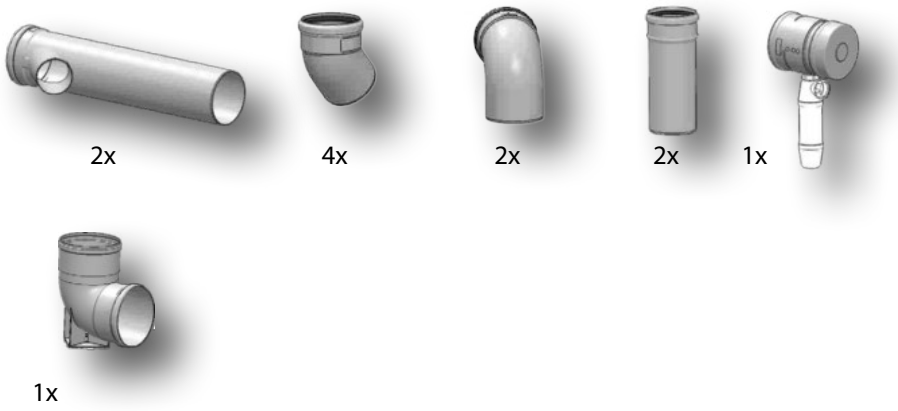

Procedure

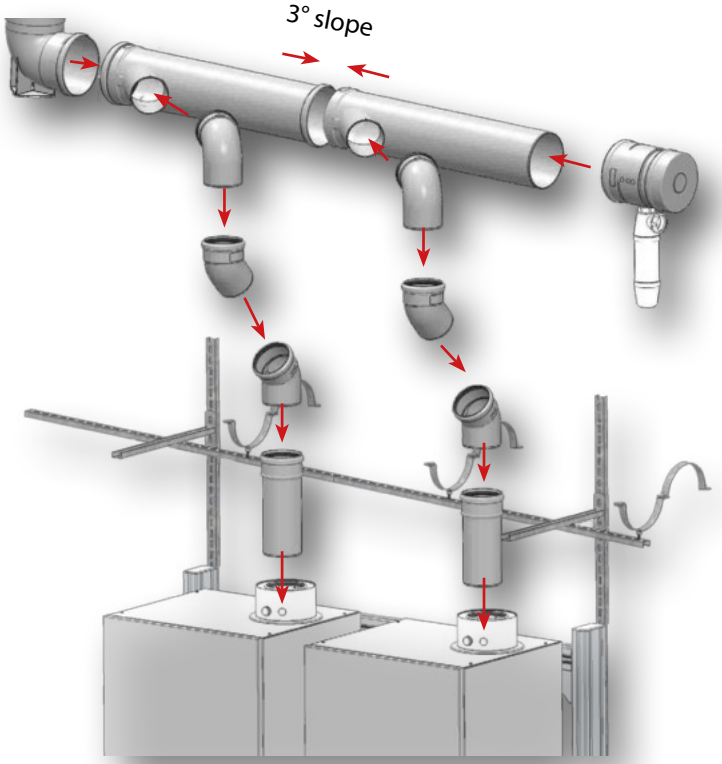

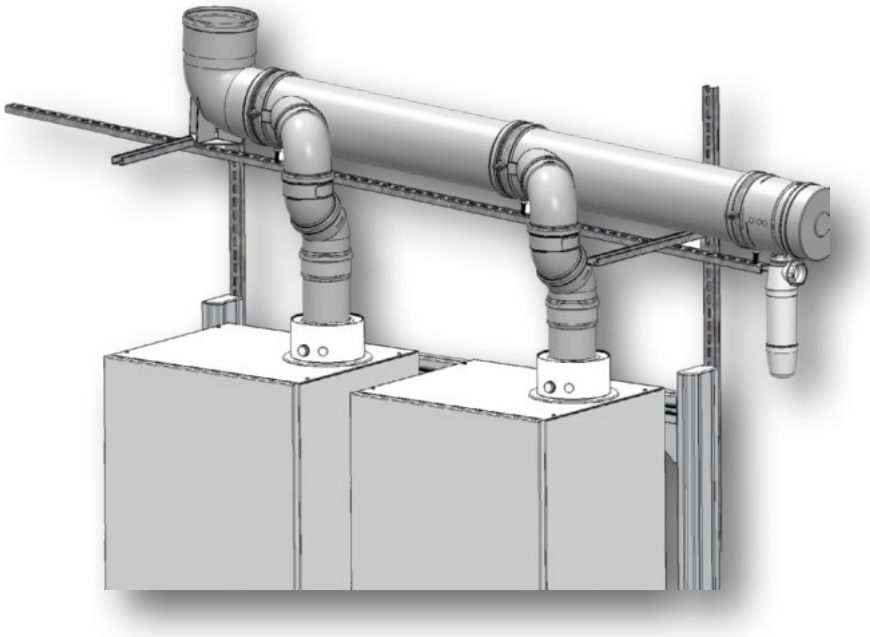

CASCADE SYSTEM CONNECTION (4-BOILER CASCADE)

Set-up conditions

- Gas conversion done as required
- Boilers switched off using the ON/OFF master switch
- External power supply closed
- Gas supply closed
- Master boiler of the system defined
- Front panel of the boilers open (refer to the relevant procedure in the Installation, Operation and Maintenance Instructions provided with the boiler)

Required accessories

Designation	P/N	QTY
Cascade connection wire harness	257F1166	3

Connection Procedure

Refer to the diagram below for a general cascade connection scheme.

1. Connect the 4-terminal end connector (**3**) of the cascade connection harness (**1**) to the X16 terminal (**4**) of the electronic board on the Master boiler.
2. Route the wire harness as shown in (**6**).
3. Connect the 6-terminal end connector (**2**) of the cascade connection harness (**1**) to the socket located at the bottom of the front panel of the boiler, accessing from underneath (**5**).

Follow-on tasks

1. Make all the heat demand connections (eg. Room thermostats, sensor connections (DHW sensor, Cascade sensor) and pump connections to the Master appliance (see also following pages for the hydraulic and electrical configurations).
2. Connect the local Slave appliance pumps.
3. Close the front panel of the boilers.
4. Perform Cascade start-up procedure, refer to "Cascade start-up process".

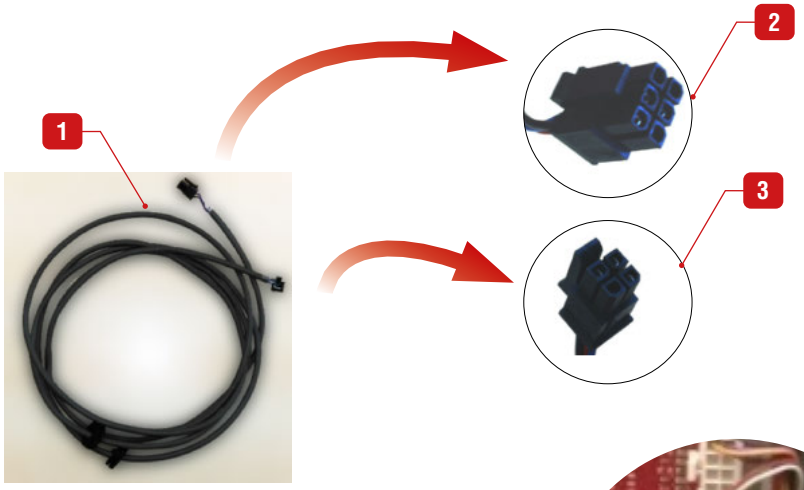

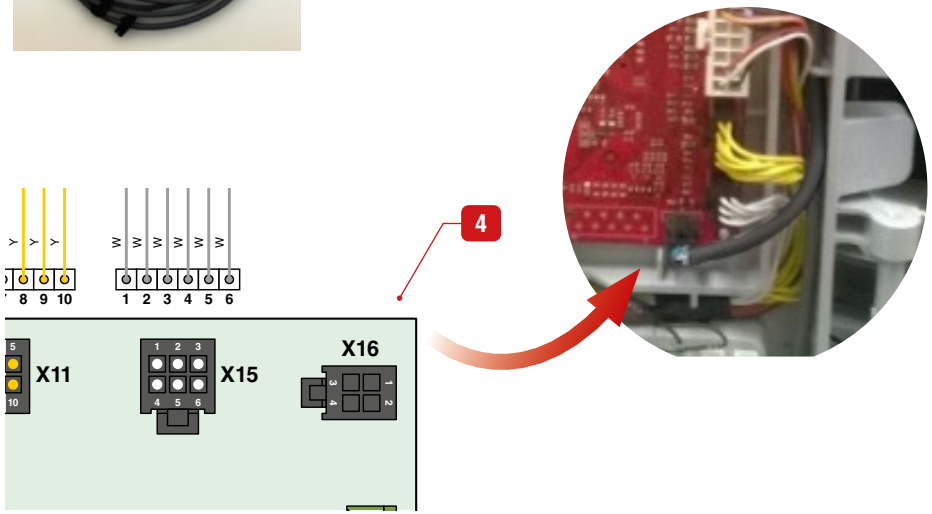

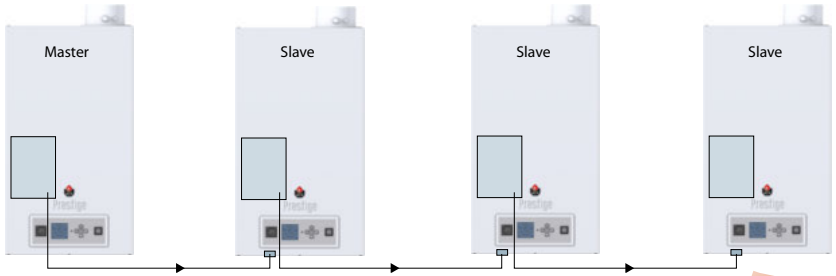

CASCADE START-UP PROCESS

Set-up conditions

- Cascade electrical connection done (Prestige Solo (Pre-set), refer to **"Cascade system connection (4-boiler Cascade)"**).
- Condensate trap full of water
- External power supply open
- Gas supply open
- Hydraulic circuit(s) full of water

Procedure

1. Power up all appliances using their ON/OFF master switch.
2. Start Cascade autodetection from the Master appliance (See on the right). The Master appliance will then become the electronic master of the system. It will automatically recognize the number of appliances in the cascade.

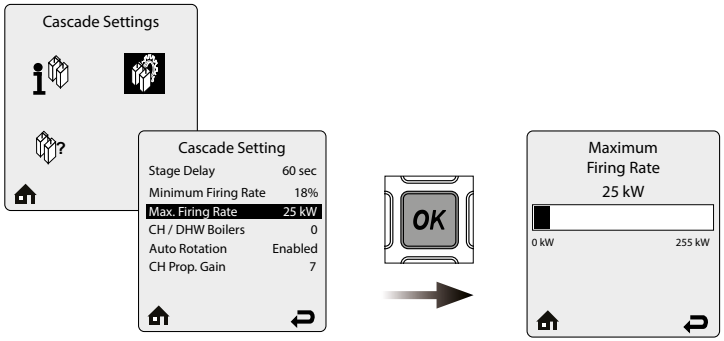

3. Set the maximum appliance power as follows :
   The master boiler will then calculate the total system capacity based on the defined appliance capacity.
4. Set the system parameters on the Master appliance:
   - CH1 curve
   - CH2 curve
   - DHW setpoint

Follow-on tasks

None

ACCESSING THE CASCADE AUTODETECTION PAGE

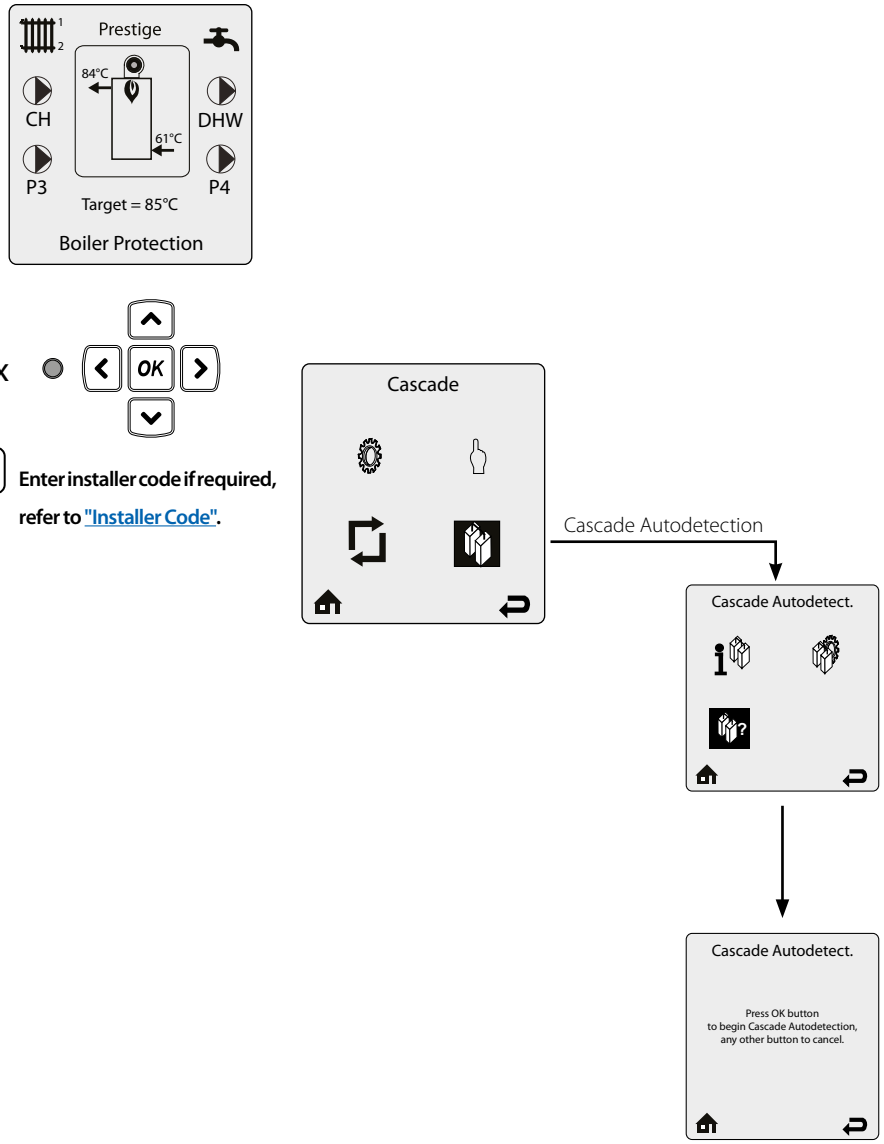

PRESET CONFIGURATION 2

3-boiler cascade configuration, high temperature, with DHW circuit

General remarks

- **Refer to the next page to know how to set up the ACVMax controller.**
- **For cascade system setup, refer to "Cascade system connection (4-boiler Cascade)".**

Pump Configuration 2

Flex 4 ERR	Flex 6 P4	Flex 3 P3	Flex 2 DHW	Flex 1 CH	Flex 5 Flame
Error	CH1	CH1/CH2/ DHW	DHW	CH1/CH2/ DHW	Flame

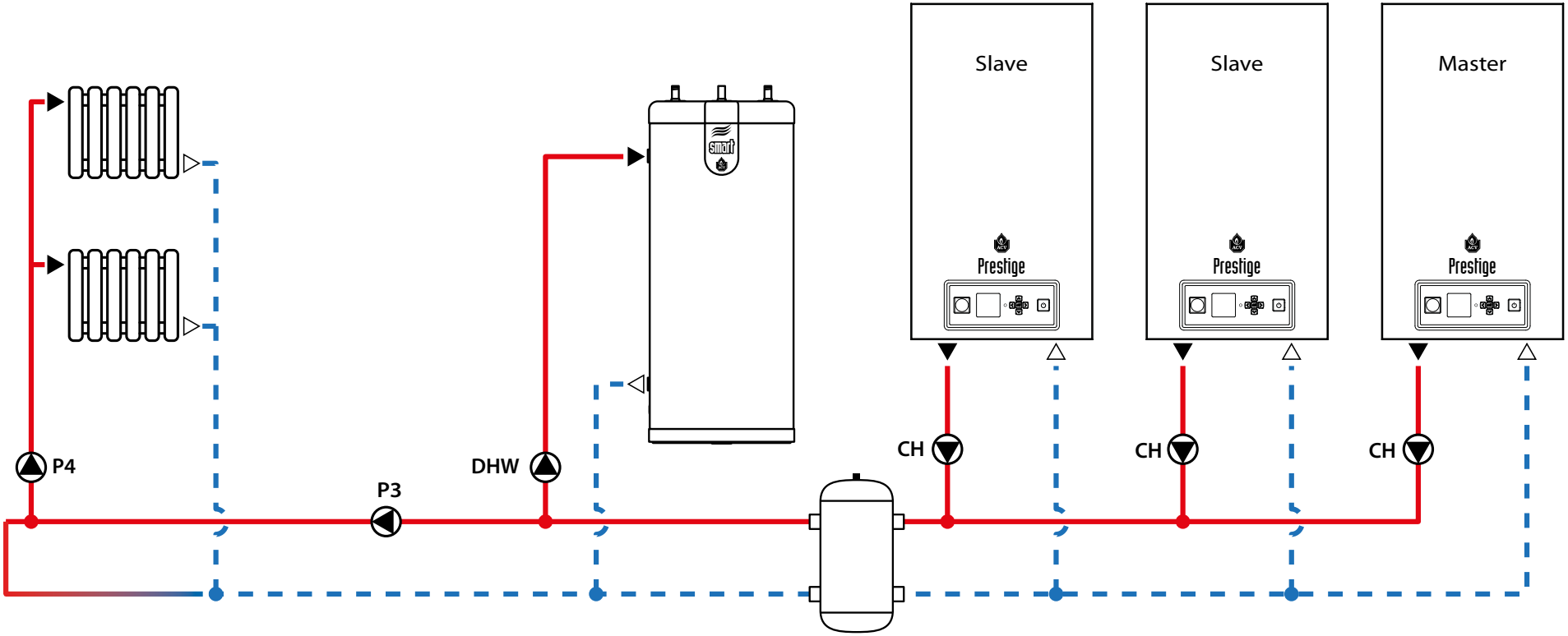

Master

Electrical board terminals	Terminal name --> Connected to	
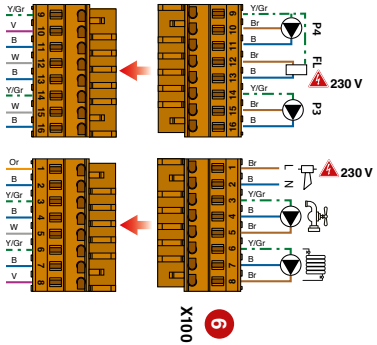	..... P4	--> P4 pump
	..... FL	--> Flame
	..... P3	--> P3 pump
	..... ERR	--> Error (Alarm)
	..... DHW	--> DHW pump
	..... CH	--> CH pump

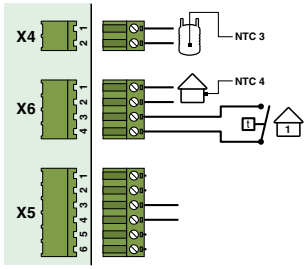

..... DHW sensor (NTC3)

..... Optional outdoor temp. sensor (NTC4)

..... Optional room thermostat

..... Cascade sensor

Pump Configuration 2

Flex 4 ERR	Flex 6 P4	Flex 3 P3	Flex 2 DHW	Flex 1 CH	Flex 5 Flame
Error	CH1	CH1/CH2/ DHW	DHW	CH1/CH2/ DHW	Flame

Slave

Electrical board terminals	Terminal name --> Connected to	
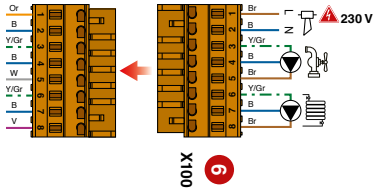	..... ERR	--> None
	..... DHW	--> None
	..... CH	--> CH pump

ACVMax interface settings using the Installer menu (Installer code needed, see "Installer Code"):

Main Screen	Sub-screen	item	Sub-item	Required selection
		Model		Prestige Solo (Pre-set)
		Pump Settings	Preset Pump Config	Config 2
		Heating Operation		Enabled
		CH2 Circuit		Enabled
		Demand		Thermostat and Outd. curve
		DHW Operation		Enabled
		Demand		Sensor

Main Screen	Sub-screen	item	Sub-item	Required selection
		Model		Prestige Solo (Pre-set)
		Pump Settings	Preset Pump Config	Config 2
		Heating Operation		Enabled
		CH2 Circuit		Enabled
		Demand		Thermostat and Outd. curve
		DHW Operation		Enabled
		Demand		Sensor

3-boiler cascade configuration, high temperature, with DHW circuit

General remarks

- **Refer to next page to know how to set up of the ACVMax controller.**
- **For cascade system setup, refer to "Cascade system connection (4-boiler Cascade)".**

Pump Configuration 2

Flex 4 ERR	Flex 6 P4	Flex 3 P3	Flex 2 DHW	Flex 1 CH	Flex 5 Flame
Error	CH1	CH1/CH2/ DHW	DHW	CH1/CH2/ DHW	Flame

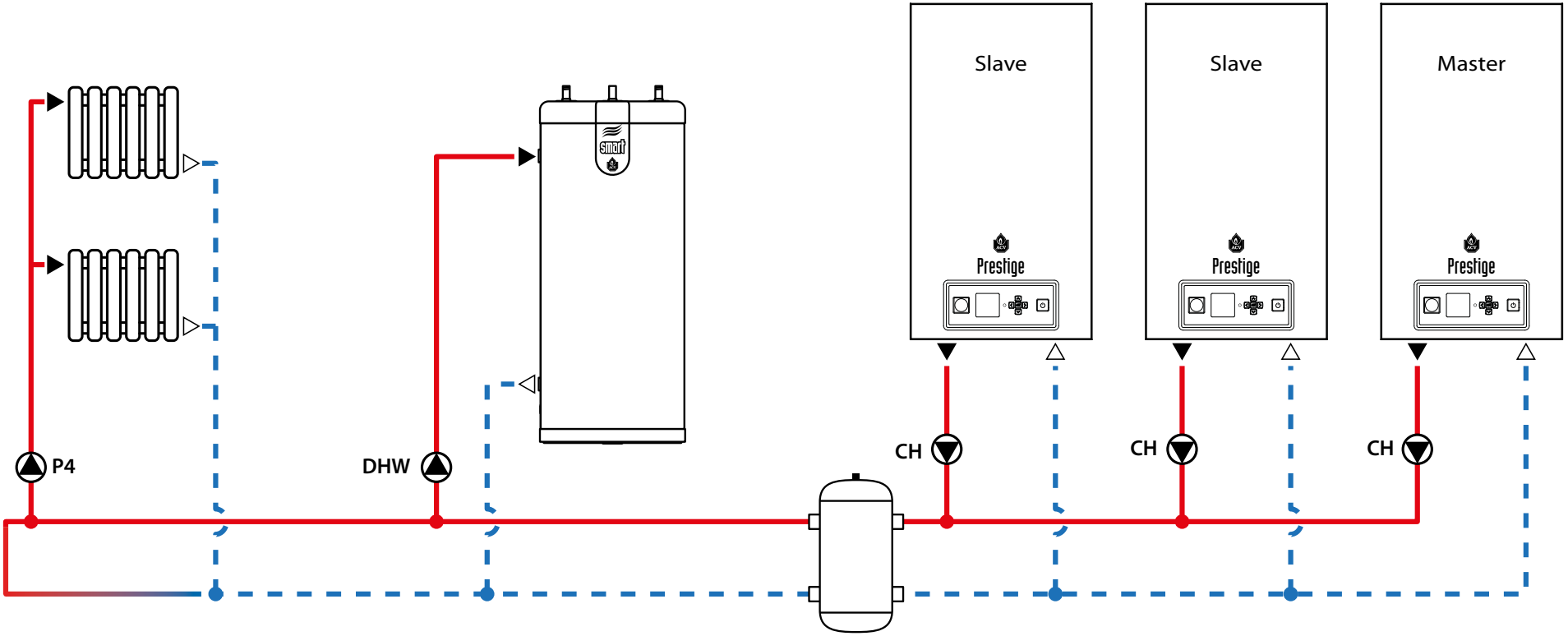

Master

Electrical board terminals	Terminal name --> Connected to	
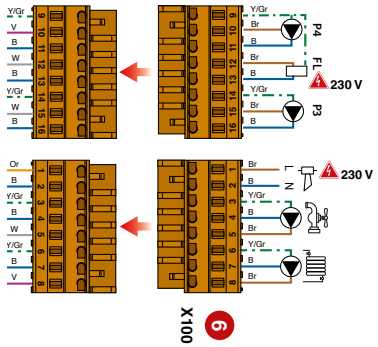	..... P4	--> P4 pump (CH1 circuit)
	..... FL	--> Flame
	..... P3	--> None
	..... ERR	--> Error (Alarm)
	..... DHW	--> DHW pump
	..... CH	--> CH pump

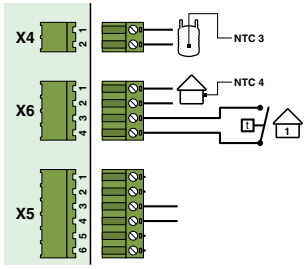

..... DHW sensor (NTC3)

..... Optional outdoor temp. sensor (NTC4)

..... Optional room thermostat

..... Cascade sensor

Main Screen	Sub-screen	item	Sub-item	Required selection
		Model		Prestige Solo (Pre-set)
		Pump Settings	Preset Pump Config	Config 2
		Heating Operation		Enabled ( )
		CH2 Circuit		Enabled
		Demand		Thermostat and Outd. curve
		DHW Operation		Enabled ( )
		Demand		Sensor

Pump Configuration 2

Flex 4 ERR	Flex 6 P4	Flex 3 P3	Flex 2 DHW	Flex 1 CH	Flex 5 Flame
Error	CH1	CH1/CH2/ DHW	DHW	CH1/CH2/ DHW	Flame

Slave

Electrical board terminals	Terminal name --> Connected to	
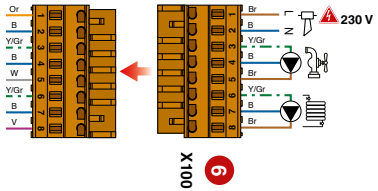	..... ERR	--> None
	..... DHW	--> None
	..... CH	--> CH pump

ACVMax interface settings using the Installer menu (Installer code needed, see "Installer Code"):

Main Screen	Sub-screen	item	Sub-item	Required selection
		Model		Prestige Solo (Pre-set)
		Pump Settings	Preset Pump Config	Config 2
		Heating Operation		Enabled ( )

PRESET CONFIGURATION 5

3-boiler cascade configuration, with two high temperature heating circuits and DHW circuit

Pump Configuration 5

Flex 4 ERR	Flex 6 P4	Flex 3 P3	Flex 2 DHW	Flex 1 CH	Flex 5 Flame
Error	CH2	CH1	DHW	CH1/CH2/ DHW	Flame

General remarks

- **Refer to next pageto know how to set up the ACVMax controller.**
- **For cascade system setup, refer to "Cascade system connection (4-boiler Cascade)".**

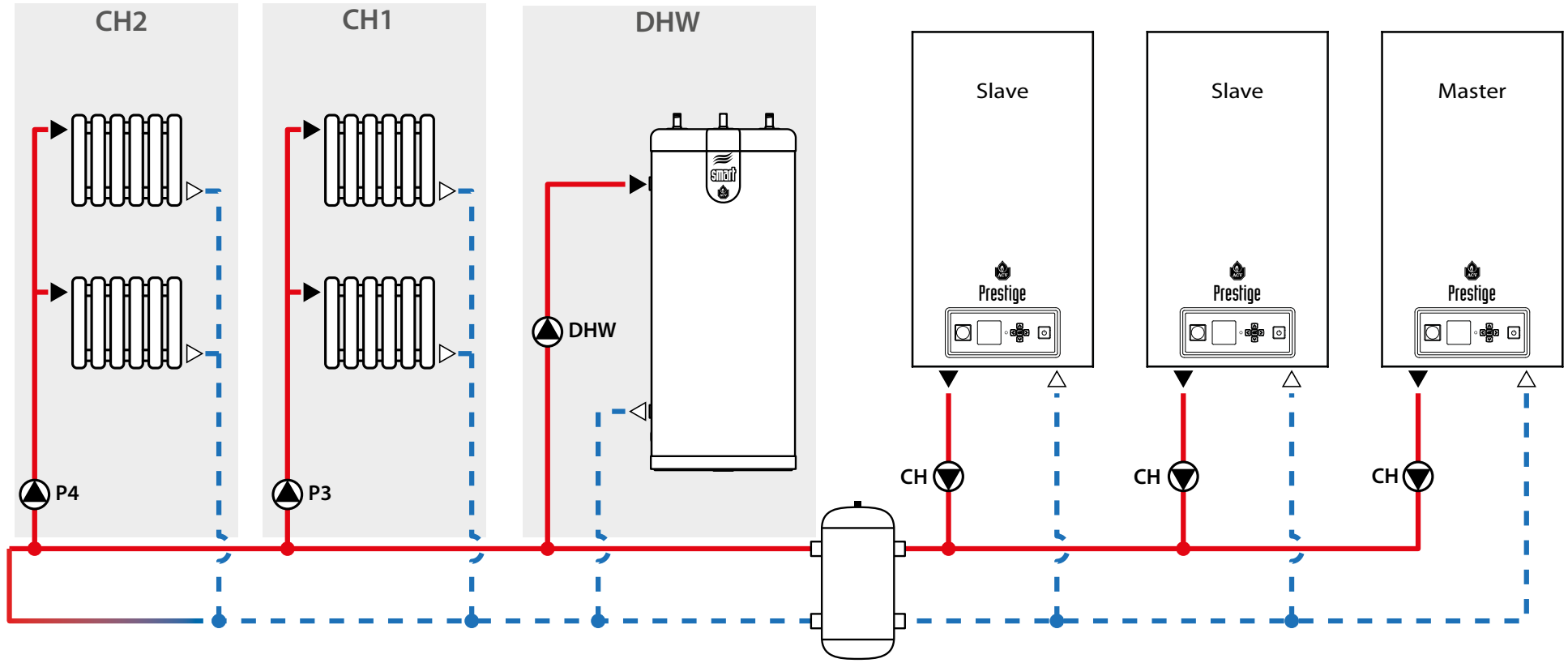

Master

Electrical board terminals	Terminal name --> Connected to	
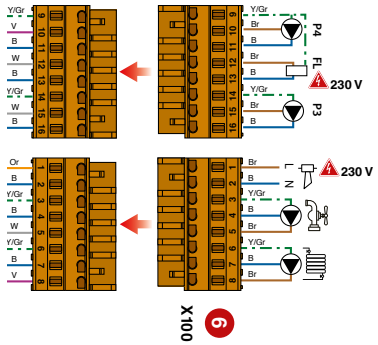	..... P4	--> P4 pump (CH2 circuit)
	..... FL	--> Flame
	..... P3	--> P3 pump (CH1 circuit)
	..... ERR	--> Alarm
	..... DHW	--> DHW pump
	..... CH	--> CH pump
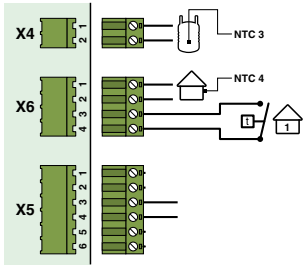	..... DHW sensor (NTC3)	
	..... Optional outdoor temp. sensor (NTC4)	
	..... Optional room thermostat	
	..... Cascade sensor	

Pump Configuration 5

Flex 4 ERR	Flex 6 P4	Flex 3 P3	Flex 2 DHW	Flex 1 CH	Flex 5 Flame
Error	CH2	CH1	DHW	CH1/CH2/ DHW	Flame

Slave

Electrical board terminals	Terminal name --> Connected to	
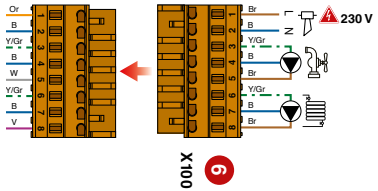	..... ERR	--> None
	..... DHW	--> None
	..... CH	--> CH pump

ACVMax interface settings using the Installer menu (Installer code needed, see "Installer Code"):

Main Screen	Sub-screen	item	Sub-item	Required selection
		Model		Prestige Solo (Pre-set)
		Pump Settings	Preset Pump Config	Config 5
		Heating Operation		Enabled
		CH2 Circuit		Enabled
		Demand		Thermostat and Outd. curve
		DHW Operation		Enabled
		Demand		Sensor

Main Screen	Sub-screen	item	Sub-item	Required selection
		Model		Prestige Solo (Pre-set)
		Pump Settings	Preset Pump Config	Config 5
		Heating Operation		Enabled
		CH2 Circuit		Enabled

THE INSTALLER'S HANDBOOK FOR HEATING SYSTEMS CONTROLLED WITH ACVMAX

VOLUME 4
Chimney Connections

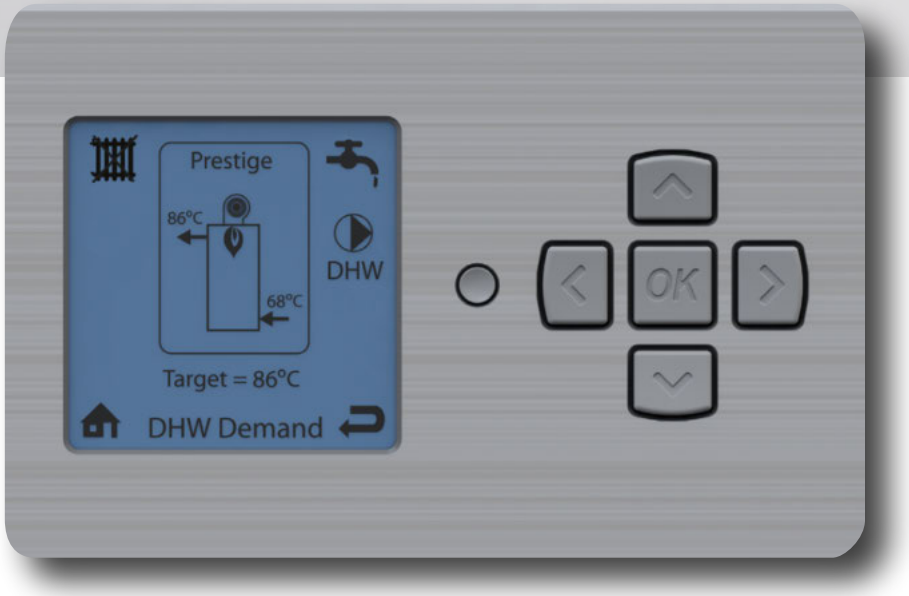

Prestige 24 - 32 Solo /Excellence
Prestige 42 - 50 - 75 - 100 - 120 Solo
HeatMaster 25 C
HeatMaster 25 - 35 - 45 - 70 - 85 - 120 TC
WaterMaster 25 - 35 - 45 - 70 - 85 - 120
HeatMaster 201

Applicable to appliances manufactured from March 2019, equipped with at least software version (DSP) 4.04

EXCELLENCE IN HOT WATER ACV

VOLUME 4 - CHIMNEY CONNECTIONS

GENERAL RECOMMENDATIONS FOR CHIMNEY CONNECTION 4-3
CHIMNEY CONNECTION CHARACTERISTICS FOR PRESTIGE BOILERS..... 4-4
CALCULATION OF FLUE PIPE SYSTEM - PRESTIGE BOILERS..... 4-5
Calculation of the Flue Pipe Length 4-5
Prestige Solo Cascade : maximum length of flue pipes.....4-6
COMPONENTS FOR FLUE PIPE SYSTEM - PRESTIGE BOILERS 4-7
CHIMNEY CONNECTION CHARACTERISTICS FOR HEATMASTER C, TC AND WATERMASTER APPLIANCES 4-9
CALCULATION OF FLUE PIPE SYSTEM - HEATMASTER C, TC AND WATERMASTER APPLIANCES 4-10
Calculation of the flue pipe length 4-10
HeatMaster/WaterMaster Cascade : maximum length of flue pipes 4-11
COMPONENTS FOR FLUE PIPE SYSTEM - HEATMASTER C, TC AND WATERMASTER APPLIANCES 4-12
CHIMNEY CONNECTION CHARACTERISTICS FOR HEATMASTER 201..... 4-14
Chimney connection characteristics.....4-14

For more information on cascade installation of Prestige 42 - 50 - 75 - 100 - 120 Solo, refer to Volume 3, "Chimney connections of Cascade Systems".

GENERAL RECOMMENDATIONS FOR CHIMNEY CONNECTION

Essential recommendations for safety

- Do not install the boiler into a common flue piping with any other gas or oil appliances. This will cause flue gas spillage or appliance malfunction.
- Verify installed combustion air and flue piping are sealed gas tight and meet all provided instructions and applicable codes and standards.
- Failure to properly support the flue system can cause the flue system to fail, resulting in substantial property damage, serious injury, or death.
- A byproduct of any gas/oil fired appliance is carbon monoxide. Failure to install carbon monoxide detectors with alarms can result in serious injury, or death. Refer to applicable local regulations.

Essential recommendations for the correct operation of the appliance

- A condensation outlet connected to the sewer must be fitted close to the boiler to prevent the condensation products from the flue pipe from running into the boiler.
- Install a condensate neutralisation system if required by national and/or local regulations and have it cleaned regularly.
- Only use flue system components from the same manufacturer to connect this appliance and ensure that the pipe and connection diameters all match.
- Make sure to secure the flue piping to a solid structure.
- Exclusively use provided brackets to support the flue system.
- Install the horizontal flue pipes with a slight slope of 5 cm per meter (3°), so that the acid condensation water flows to a condensate recovery container and does not damage the heating body.

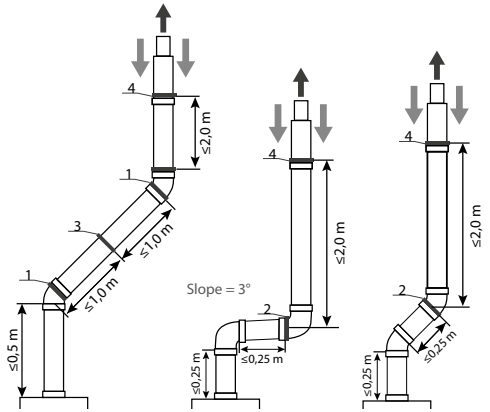

1. Each elbow and straight element will be secured at the sleeve.
2. In case the straight element before or after the first elbow is shorter than 25 cm, secure the straight element after the elbow using a bracket.
3. In case a straight (horizontal or sloped) element is longer than 1 m, support the element in its center using a clamp, making sure to allow free movement of the pipe.
4. Secure with a clamp every 2 meters in vertical piping/1 meter in horizontal/sloped piping, making sure to distribute the clamps evenly on the length of piping.

- If the appliance is provided with a condensate drain assembly, make sure to install the complete assembly on the boiler. If the assembly is incomplete, replace the entire assembly.
- Make sure that the condensate drain assembly is filled with water before starting up the boiler and check regularly the water level. Fill with water as necessary.
- It is mandatory to ventilate the boiler room. The high or low air vent opening dimensions depend on the boiler power and the boiler room size. Refer to the local regulations in force.
- If the combustion air inlet is located in an area likely to cause or contain contamination, or if products which could contaminate the air cannot be removed, the combustion air must be repiped and terminated at another location.
- Pool, laundry, common household, and hobby products often contain fluorine or chlorine compounds, which can form strong acids and corrode the internal components and flue system.
- In the case of parallel flue systems, make sure to maintain sufficient distance (at least 40 mm) between the boiler flue piping and combustible materials, and between the flue pipe and air inlet pipe if the latter is made of plastic material.
- Do not use screws to fasten together any flue pipe elements or any PP air inlet elements.
- Do not bond piping elements together using glue (e.g. silicone) or foam (e.g. PUR).

General remark

- For safety reasons and to make assembly easier, it is recommended to prefer the use of concentric flue pipes when possible.
- It is recommended to isolate the flue piping in damp rooms to prevent condensation water from forming on the piping and drip.
- When cutting the pipes to dimension, make sure to cut squarely and deburr the edges to prevent seals from being incorrect or damaged.
- To make piping assembly easier, exclusively use a mixture of water and soap (1%) on the extremity of the pipe to be fit in.
- When fitting metal flue pipes, make sure to always fit the pipe into the sleeve to the end stop.
- When fitting plastic flue pipes, make sure to allow material expansion by leaving about 10 mm between the pipe end and the sleeve end stop.
- Make sure to install the piping without any strain.
- Make sure to install an inspection opening in the flue system.
- When connecting the flue pipes, make sure not to exceed the maximum length recommended for the product, otherwise the system power might decrease.
- ACV-approved components will be used for the chimney connection. Failure to do so will make any warranty claim void.
- For C63 connection type (not allowed in Belgium), make sure to use the correct piping material according to the resistance to temperature, pressure, chemical composition of flue, condensation and soot. A code (as explained in EN 1443), marked on the pipe, allows to determine if the material complies with the flue system requirements.

FLUE PIPE CONNECTION TYPES - PRESTIGE SOLO AND EXCELLENCE

It is mandatory to use ACV flue systems to connect the appliance.

B23P: : Connection to a combustion product exhaust system designed to operate with positive pressure.

B23 : Connection to an exhaust duct that discharges the combustion products outside the room where it is installed, with the combustion air being drawn directly from the boiler room.

C13(x) : Connection using pipes fitted with a horizontal terminal that simultaneously takes in combustion air for the burner and discharges combustion products outside through openings that are either concentric or close enough together to be subjected to similar wind conditions, i.e. openings shall fit inside a square of 50 cm for boilers up to 70 kW and inside a square of 100 cm for boilers above 70 kW.

C33(x) : Connection using pipes fitted with a vertical terminal that simultaneously takes in fresh air for the burner and discharges combustion products outside through openings that are either concentric or close enough together to be subjected to similar wind conditions , i.e. openings shall fit inside a square of 50 cm for boilers up to 70 kW and inside a square of 100 cm for boilers above 70 kW.

C43(x) : Connection using two pipes to a collective duct system serving more than one appliance; this system of collective ducts features two pipes connected to a terminal unit that simultaneously takes in fresh air for the burner and discharges the combustion products outside through openings that are either concentric or close enough together to be subjected to similar wind conditions. C43(x) boilers are suitable for a connection to a natural draught chimney only.

C53(x) : Connection to separate ducts for supplying combustion air and discharging combustion products; these ducts may end in zones with different pressure levels, but are not allowed to be installed on opposite walls of the building.

C63(x) : Type C boiler meant to be connected to a system for supplying combustion air and discharging combustion products, that is approved and sold separately **(Prohibited in some countries (e.g. Belgium) - refer to local regulations and standards in force)**. Terminals for the supply of combustion air and for the evacuation of combustion products are not allowed to be installed on opposite walls of the building. See also the following additional specifications:

- Maximum allowable draught is 200 Pa.
- Maximum allowable pressure difference between combustion air inlet and flue gas outlet (including wind pressures) is 150 Pa (for P24/P32/P42/P50/P75) and 180 Pa (for P100/P120).
- Condensate flow is allowed into the appliance.
- Maximum allowable recirculation rate of 10% under wind conditions.

C83(x) : Connection using a single or double duct system. The system is made of a normal exhaust flue duct that discharges the combustion products. The appliance is also connected through a second duct fitted with a terminal, that supplies the burner with fresh outdoor air.

C93(x) : Connection using an individual system whose combustion product exhaust duct is installed in an exhaust duct that is integral with the building. The appliance, the exhaust duct and the terminal units are certified as an inseparable assembly. Minimum usable diameter for the vertical duct supplying the combustion air is 100 mm.

The C93 configuration enables airtight operation in a pre-existing chimney. The combustion air crosses the space between the tubing and the pre-existing chimney. Make sure to clean the pre-existing chimney thoroughly prior to installation, especially if there is soot or tar residue. Make sure that there is a clearance area for the combustion air at least equivalent to the area that would have been provided by separate concentric ducts or air intake ducts.

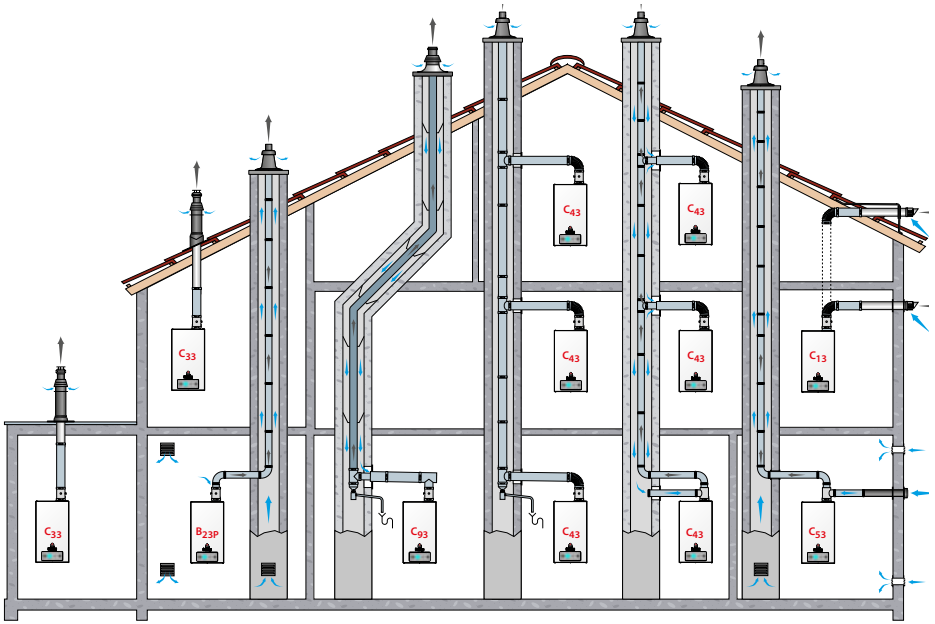

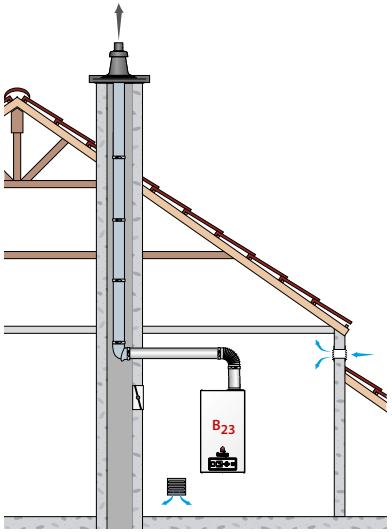

Make sure that the combustion air openings remain unobstructed at all times. Failure to comply can result in serious damage, injury or death.

It is mandatory to ventilate the boiler room. The high or low air vent opening dimensions depend on the appliance power and the boiler room size. Refer to the local regulations in force.

CALCULATION OF THE FLUE PIPE LENGTH

When connecting the flue pipes, make sure not to exceed the maximum length recommended for the product, otherwise the system pressure might decrease.

The flue pipe dimensions can be calculated using the method shown on the right. Please refer to the tables on the right indicating the equivalent length in meters of straight pipes, applied to each of the connection components. Then compare the calculation result to the recommended maximum flue pipe length for each type of Prestige model, as indicated below.

	Maximum length of flue pipes (in m) (terminals incl.)						
		Concentric flue pipe		Single wall connection		Flex connection	
	Ø 60/100	Ø 80/125	Ø 100/150	Ø 80	Ø 100	Ø 80	Ø 100
P24	24	105	—	102	—	48	—
P32	12	56	—	54	—	26	—
P 42	—	10	25	10	35	5	17
P 50	—	10	25	10	35	5	17
P75	—	10	25	10	35	5	17
P 100	—	—	20	—	30	—	15
P 120	—	—	20	—	30	—	15

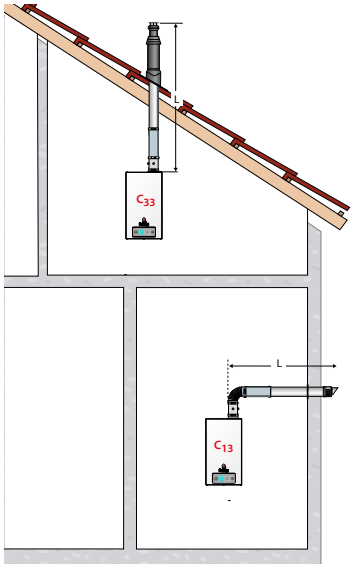

Concentric connection

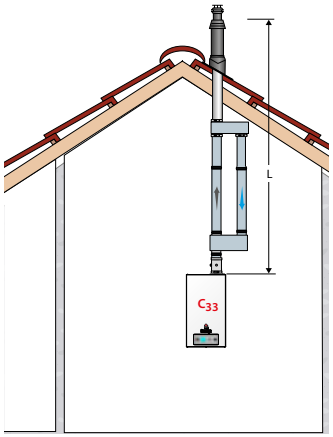

Parallel connection

Tables of equivalent length for the various connection accessories and connection types:

The following tables are based on ACV equipment and cannot be applied as a rule.

	Equivalent length for accessories		
	Prestige 24-32 Solo/Excellence		
	Concentric flue pipe Ø 60/100 mm	Concentric flue pipe Ø 80/125 mm	Parallel flue pipe Ø 80 mm
1 m straight pipe	1 m	1 m	1 m
90° elbow	1.4 m	2 m	2.3 m
45° elbow	1.2 m	1 m	1 m

	Equivalent length for accessories			
	Prestige 42 - 50 - 75 - 100 - 120 Solo			
	Concentric flue pipe		Single wall connection	
	Ø 80/125	Ø 100/150	Ø 80	Ø 100
1 m straight pipe	1	1	1	1
90° elbow	1.43	1.72	2.16	3.6
45° elbow	0.81	1.14	0.91	2.23
Flex line	-	-	1.93	2.12

The equivalent length for pipes equipped with a measuring unit is equal to a 1 meter straight pipe

Example of calculation in the case of a concentric flue pipe :

This figure shows an example for a Prestige 50 Solo with a 100/150 concentric flue connection.

The assembly is comprised of: 2 x 90° elbows + 6 meters of straight pipes + 2 x 45° elbows.

The installer can check that the connection complies with the recommended value using the method below.

- **Method :**

a) Calculate the corresponding length in meters of pipes for the flue pipe assembly:

(2 x 1.72) + (6 x 1) + (2 x 1.140) = **11.72 m**

b) Compare the resulting value with the recommended length value (25 m).

The flue pipe length is within the recommended range.

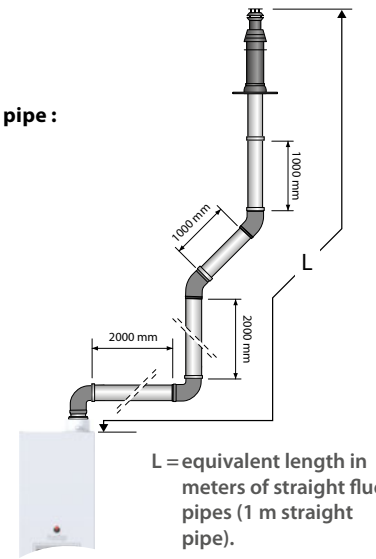

L = equivalent length in meters of straight flue pipes (1 m straight pipe).

PRESTIGE SOLO CASCADE : MAXIMUM LENGTH OF FLUE PIPES

Prestige 50 Solo cascade in a C43 chimney connection configuration

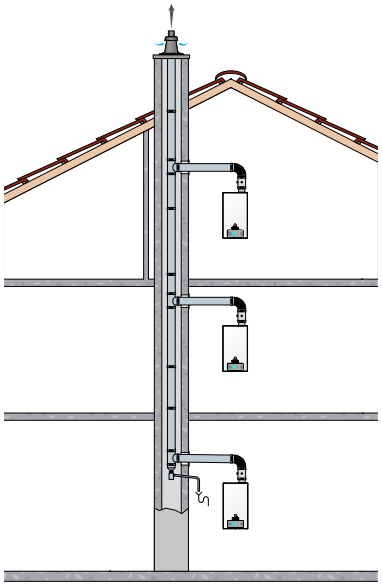

Prestige 50 Solo cascade in a B23 chimney connection configuration

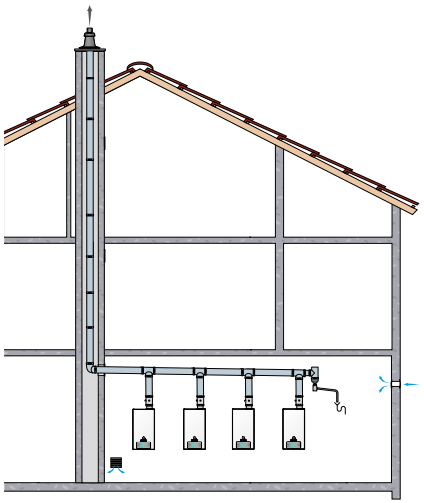

Elbow type	150	200
	L. Eq.	L. Eq.
45° [M]	1.7	3.8
90° [M]	4.0	5.8

		Ø of horizontal/vertical ducts in mm				
Nb of boilers	Prestige Solo	150	150/200**	200	200/250	200/300
7	120	—	—	—	—	30 m
6	120	—	—	—	30 m	30 m
5	120	—	—	15 m	30 m	30 m
4	120	—	25 m	30 m	30 m	30 m
3	120	—	30 m	30 m	30 m	30 m
8	75	—	—	—	—	30 m
7	75	—	—	—	30 m	30 m
6	75	—	—	5 m	30 m	30 m
5	75	—	—	30 m	30 m	30 m
4	75	—	30 m	30 m	30 m	30 m
8	50	—	—	—	30 m	30 m
7	50	—	—	20 m	30 m	30 m
6	50	—	—	30 m	30 m	30 m
5	50	—	30 m	30 m	30 m	30 m
4	50	20 m	30 m	30 m	30 m	30 m
8	42	—	—	—	30 m	30 m
7	42	—	—	20 m	30 m	30 m
6	42	—	—	30 m	30 m	30 m
5	42	—	30 m	30 m	30 m	30 m
4	42	20 m	30 m	30 m	30 m	30 m

* This table is for systems comprised of appliances with identical power. For any other configuration, please refer to your ACV representative.

**Dn 150/200 : Hor. = 150 mm, Vert.=200 mm

Boiler Models	Connexion type	Material / Ø (mm)	Components *						
			Terminals	Pipes	Extensions	Bends	Measurement and condensate recovery	Accessories	Adapters
Prestige 24-32	C93	PP Flex Ø 60	Set C93 Ø 60/100, (537D6407)	Flexible PP Ø 60, 25 m (537D6406)	—	—	—	• Connection sheath Alu for 60/100 (537D6408) • Connector Flex-Flex PP Ø 60 (537D6447)	—
Prestige 24-32	C13 C33	PP - Galva Ø 60/100	• Roof Terminal (537D6353) • Wall Terminal (537D6354)	Lengths : • 250 mm (537D6355) • 500 mm (537D6356) • 1000 mm (537D6357)	Sliding extension, straight (+ 50 to 130 mm) (537D6358)	• 15° (537D6466) • 30° (537D6467) • 43° - 45° (537D6359) • 87° - 90° (537D6360)	Measuring T-piece with inspection (537D6361)	• Weather Slate Steep (537D6363) • Bracket Ø 100 mm (537D6364) • Weather Slate Flat roof (Ø 350 mm) (537D6362)	Adapter Ø 60/100 - 2 x Ø 80 with measurement points (537D6415)
Prestige 24-32 Prestige 42-50-75	C93	PP Flex Ø 80	Set C93 Ø 80/125, (537D6287)	Flexible PP PP Ø 80, 25 m (537D6275)	—	—	—	• Connection sheath Alu for 80/125 (537D6266) • Connector Flex-Flex PP Ø 80 (537D6448)	—
Prestige 24-32 Prestige 42-50-75	C13 C33	PP - Galva Ø 80/125	• Roof Terminal (537D6184) • Wall terminal kit (537D6185)	Lengths : • 250 mm (537D6186) • 500 mm (537D6187) • 1000 mm (537D6188) • 2000 mm (537D6516)	Sliding extension , straight (+ 50 to 130 mm) (537D6189)	• 43° - 45° (537D6190) • 87° - 90° (537D6191)	• Measuring Tube (537D6193) • Measuring T-piece with inspection (537D6229)	• Weather Slate Steep (537D6182) • Bracket Ø 125 mm (537D6183) • Weather salte, flat roof (Ø 390 mm) (537D6194)	• Expander SST/Alu Ø 80/125 mm - 2 x Ø 80 mm (537D6231) • Expander PP/ALU, Ø 60/100 mm - Ø 80/125 mm (537D6405)
Prestige 42-50-75-100-120	C93	PP Flex Ø 100	Set C93 Ø 100/150, (537D6290)	Flexible PP Ø 100, 25 m (537D6271)	—	—	—	• Connection sheath Alu for Ø 100/150 (37D6267) • Adapter Flex-Flex PP Ø 100 (537D6451)	—

*** Designations and references (between brackets) are provided as information only. Please refer to the latest ACV price list for more information and the correct references.**

COMPONENTS FOR FLUE PIPE SYSTEM - PRESTIGE BOILERS

Boiler Models	Connexion type	Materi-al / Ø (mm)	Components *						
			Terminals	Pipes	Extensions	Bends	Measurement and condensate recovery	Accessories	Adapters
Prestige 42-50-75-100-120	C13 C33	PP - Galva Ø 100/150	• Roof Terminal (537D6300) • Wall terminal kit (537D6301)	Lengths : • 250 mm (537D6302) • 500 mm (537D6303) • 1000 mm (537D6304) • 2000 mm (537D6517)	Sliding extension, straight (+ 50 to 130 mm) (537D6305)	• 43° - 45° (537D6306) • 87° - 90° (537D6307)	• Measuring Tube (537D6308) • Measuring T-piece with inspection (537D6310)	• Weather Slate Steep 25°-45° (537D6209) • Bracket Ø 150 mm (537D6210) • Weather Slate, Flat roof (Ø 430 mm) (537D6208)	Concentric to parallel adapter Ø 100/150 mm - 2 x Ø 100 mm (537D6207)
Prestige 42-50-75-100-120	B23P C53	SST Ø 150	• Roof Terminal , flue Ø 150 (537D6211) • Wall terminal kit , flue, Ø 150 (537D6212) • Wall terminal kit, air, Ø 100 (537D6213)	Lengths, flue, Ø 150 : • 250 mm (537D6214) • 500 mm (537D6215) • 1000 mm (537D6216) Length, air, PVC Ø 100 : • 500 mm (537D6217)	Sliding extension, flue, Ø 150 (537D6218)	• Flue, Ø 150, 45° (537D6219) • Flue, Ø 150, 90° (537D6220) • Air, Ø 100, 45° (537D6221) • Air, Ø 100, 90° (537D6222)	Element for measurement and recovery of conden-sates, flue, Ø 150 (537D6223)	• Weather Slate Steep 25°-45° (537D6209) • Bracket Ø 150 mm (537D6210) • Weather Slate, Flat roof (Ø 430 mm) (537D6208)	• Expander Ø 100 - Ø 150 mm mandatory (537D6293) • Concentric to parallel adapter Ø 100/150 mm - 2 x Ø 100 mm (537D6207) • Adapter Ø 80 - Ø 100 mm, air (537D6172)
Prestige 42-50-75-100-120	C13 C33	SST - SST Ø 100/150	• Roof Terminal, (537D6197) • Wall terminal (537D6198)	Lengths : • 250 mm (537D6199) • 500 mm (537D6200) • 1000 mm (537D6201)	Sliding extension (280 to 395 mm) (537D6202)	• 43° - 45° (537D6203) • 87° - 90° (537D6204)	Element for measurement and recovery of conden-sates, flue, (537D6226)	• Weather Slate Steep 25°-45° (537D6209) • Bracket Ø 150 mm (537D6210) • Weather Slate, Flat roof (Ø 430 mm) (537D6208)	Concentric to parallel adapter Ø 100/150 mm - 2 x Ø 100 mm (537D6207)
Prestige Box		The chimney connection should be made using the chimney tubes and seals provided with the Prestige Box. Only parallel flue pipe connection types are possible, NO concentric.							

*** Designations and references (between brackets) are provided as information only. Please refer to the latest ACV price list for more information and the correct references.**

FLUE PIPE CONNECTION TYPES - HEATMASTER C AND TC AND WATERMASTER

It is mandatory to use ACV flue systems to connect the appliance.

B23P: : Connection to a combustion product exhaust system designed to operate with positive pressure.

B23 : Connection to an exhaust duct that discharges the combustion products outside the room where it is installed, with the combustion air being drawn directly from the boiler room.

C13(x) : Connection using pipes fitted with a horizontal terminal that simultaneously takes in combustion air for the burner and discharges combustion products outside through openings that are either concentric or close enough together to be subjected to similar wind conditions, i.e. openings shall fit inside a square of 50 cm for boilers up to 70 kW and inside a square of 100 cm for boilers above 70 kW.

C33(x) : Connection using pipes fitted with a vertical terminal that simultaneously takes in fresh air for the burner and discharges combustion products outside through openings that are either concentric or close enough together to be subjected to similar wind conditions , i.e. openings shall fit inside a square of 50 cm for boilers up to 70 kW and inside a square of 100 cm for boilers above 70 kW.

C43(x) : Connection using two pipes to a collective duct system serving more than one appliance; this system of collective ducts features two pipes connected to a terminal unit that simultaneously takes in fresh air for the burner and discharges the combustion products outside through openings that are either concentric or close enough together to be subjected to similar wind conditions. C43(x) boilers are suitable for a connection to a natural draught chimney only.

C53(x) : Connection to separate ducts for supplying combustion air and discharging combustion products; these ducts may end in zones with different pressure levels, but are not allowed to be installed on opposite walls of the building.

C63(x) : Type C boiler meant to be connected to a system for supplying combustion air and discharging combustion products, that is approved and sold separately **(Prohibited in some countries (e.g. Belgium) - refer to local regulations and standards in force)**. Terminals for the supply of combustion air and for the evacuation of combustion products are not allowed to be installed on opposite walls of the building. See also the following additional specifications:

- Maximum allowable draught is 200 Pa.
- Maximum allowable pressure difference between combustion air inlet and flue gas outlet (including wind pressures) is as follows: 95 Pa (HM 25 TC/25 C, WM 25), 130 Pa (HM 35-45 TC, WM 35-45), 110 Pa (HM 70 TC, WM 70), 160 Pa (HM 85 TC, WM 85) and 170 Pa (HM 120 TC, WM 120).
- Condensate flow is allowed into the appliance.
- Maximum allowable recirculation rate of 10% under wind conditions.

C83(x) : Connection using a single or double duct system. The system is made of a normal exhaust flue duct that discharges the combustion products. The appliance is also connected through a second duct fitted with a terminal, that supplies the burner with fresh outdoor air. Please contact your ACV representative for the meters of flue pipes that can be used to connect the appliance(s).

C93(x) : Connection using an individual system whose combustion product exhaust duct is installed in an exhaust duct that is integral with the building. The appliance, the exhaust duct and the terminal units are certified as an inseparable assembly. Minimum usable diameter for the vertical duct supplying the combustion air is 100 mm.

The C93 configuration enables airtight operation in a pre-existing chimney. The combustion air crosses the space between the tubing and the pre-existing chimney. Make sure to clean the pre-existing chimney thoroughly prior to installation, especially if there is soot or tar residue. Make sure that there is a clearance area for the combustion air at least equivalent to the area that would have been provided by separate concentric ducts or air intake ducts.

Main Characteristics			HM 25 C HM 25 TC WM 25		HM 35 TC WM 35		HM 45 TC WM 45				HM 70 TC WM 70		HM 85 TC WM 85		HM 120 TC WM 120	
Air/flue pipe Ø	concentric	mm	80/125		80/125		80/125				100/150		100/150		100/150	
	parallel	mm	80/80		80/80		80/80				100/100		100/100		100/100	
Max. allowed flue pipe pressure drop		Pa	95		130		130				110		160		170	
Max recommended length of concentric flue pipe (corresponding length in meters of straight pipes) * Ø 80/125, terminal included			60		39		22				—		—		—	
Max recommended length of concentric flue pipe (corresponding length in meters of straight pipes) * Ø 100/150, terminal included			130***		90***		53***				20		19		18	
Max recommended length (corresponding length in meters of straight pipes) *			Paral. Ø 80	Flex Ø 80	Paral. Ø 80	Flex Ø 80	Paral. Ø 80	Flex Ø 80	Paral. Ø 100	Flex Ø 100	Paral. Ø 100	Flex Ø 100	Paral. Ø 100	Flex Ø 100	Paral. Ø 100	Flex Ø 100
			56	26	37	17	19	9	76	34	17	8	17	8	9	4
Available connection types			B23 - B23P - C13(x) - C33(x) - C43(x) - C53(x)** - C63(x) - C83(x) - C93(x)													

* See next page to calculate the flue pipe length.
** A C53 connection of the HeatMaster 25C, HeatMaster TC or WaterMaster appliances requires an optional accessory.
*** Not recommended - For more information, please contact your ACV representative.

Make sure that the combustion air openings remain unobstructed at all times. Failure to comply can result in serious damage, injury or death.

It is mandatory to ventilate the boiler room. The high or low air vent opening dimensions depend on the appliance power and the boiler room size. Refer to the local regulations in force.

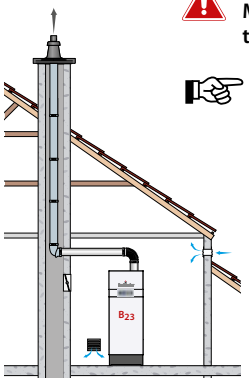

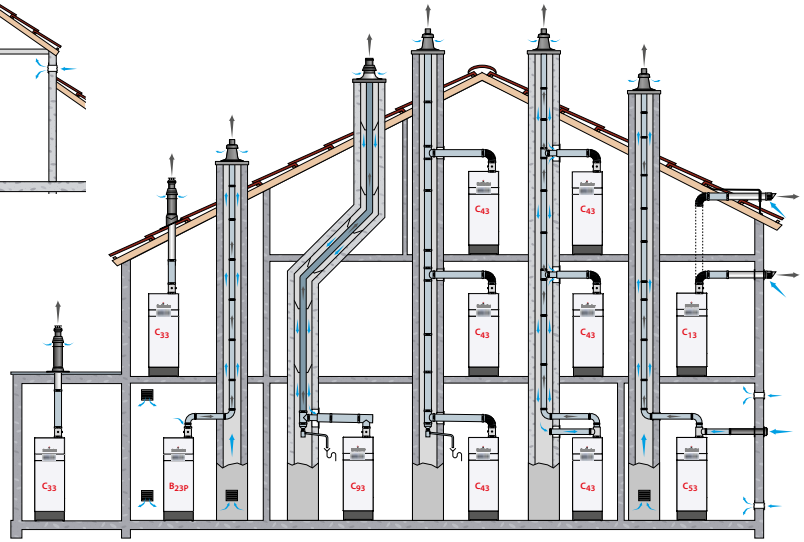

CALCULATION OF THE FLUE PIPE LENGTH

When connecting the flue pipes, make sure not to exceed the maximum flue pipe length, recommended for the product, otherwise the system pressure might decrease.

The flue pipe pipe length can be calculated using the method shown below. Please refer to the tables below indicating the values in meters, applied to each of the connection components. Then compare the calculation result to the recommended maximum flue pipe length indicated in the table on previous page.

	Flue pipe length (L) (corresponding length in meters of straight pipe)			
	HM 25C HM 25 - 35 - 45 TC WM 25 - 35 - 45		HM 25C HM 25 - 35 - 45 - 70 - 85 - 120 TC WM 25 - 35 - 45 - 70 - 85 - 120	
	Concentric flue pipe Ø 80/125 mm	Parallel flue pipe Ø 80 mm	Concentric flue pipe Ø 100/150 mm	Parallel flue pipe Ø 100 mm
1 m straight pipe	1 m	1 m	1 m	1 m
90° elbow	2 m	2.3 m	2.2 m	3.7 m
45° elbow	1 m	1 m	1.3 m	2.3 m

The equivalent length for pipes equipped with a measuring unit is equal to a 1 meter straight pipe

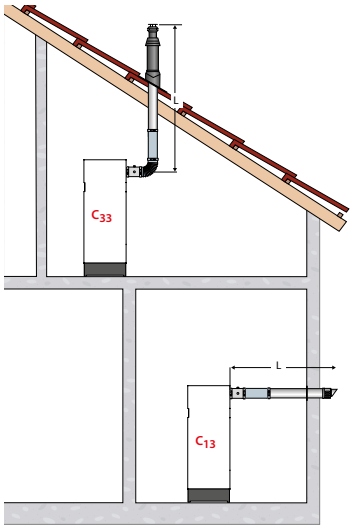

Concentric connection

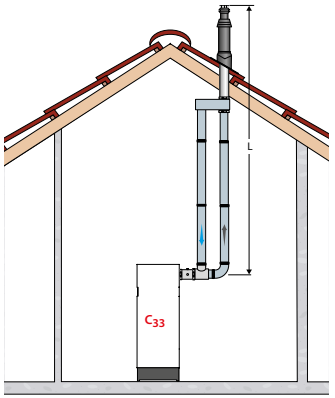

Parallel connection

Example of verification of the flue pipe length (L) in a concentric flue pipe system for HeatMaster 25C / HeatMaster 25 TC / WaterMaster 25 (80/125):

The method is explained through an example.

Figure 1 : The assembly is comprised of:

1 pipe with a measurement unit + 3 x 90° elbows + 6 meters of straight pipes + 2 x 45° elbows

- Method :

a) Using the above table, calculate the length in meters of the whole flue pipe assembly:
1 + (3 x 2) + (6 x 1) + (2 x 1) = 15 m

b) Compare the resulting value with the maximum length (60 m). This flue pipe length is within the recommended range.

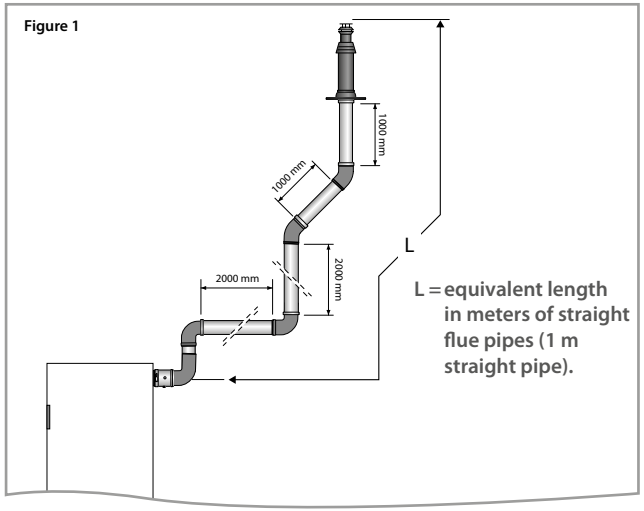

HEATMASTER/WATERMASTER CASCADE : MAXIMUM LENGTH OF FLUE PIPES

HeatMaster 25C / HeatMaster 25 - 35 TC / WaterMaster 25 - 35 cascade in a C43 chimney connection configuration

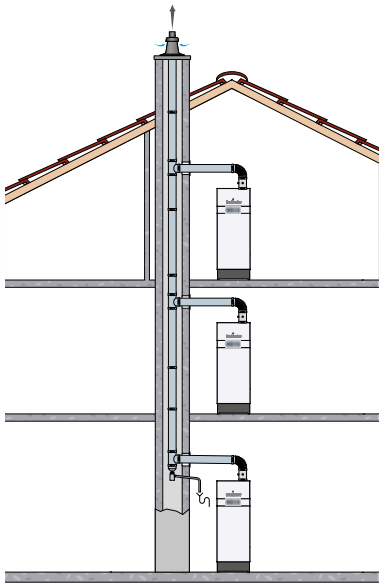

Make sure to install an external non-return valve on the flue connection. Please contact your ACV representative for the correct accessory.

HeatMaster / WaterMaster cascade in a B23 chimney connection configuration

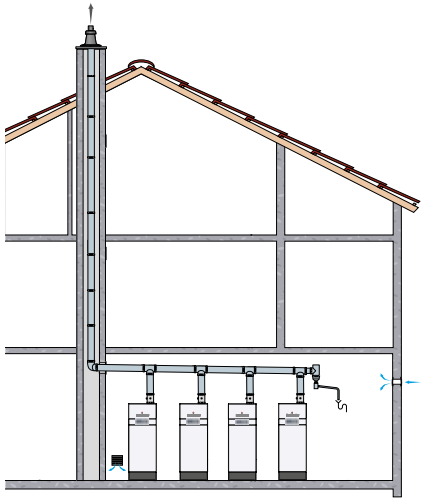

Make sure to install an external non-return valve and a cascade flue pipe kit. Please contact your ACV representative for the correct accessory.

Elbow type	150	200
	L. Eq.	L. Eq.
45° [M]	1.7	3.8
90° [M]	4.0	5.8

Qty	Appliance type* (HM TC / WM)	Maximum length in M.		
		Dn 150	Dn 150/200**	Dn 200
2	25 - 35 - 45 - 70 - 85	30	30	30
	120	—	30	30
3	25 - 35 - 45	30	30	30
	70	25	30	30
	85	26	30	30
	120	—	—	—
4	25 - 35 - 45	30	30	30
	70	—	30	30
	85	—	30	30
	120	—	—	—
5	25 - 35 - 45	30	30	30
	70	—	30	30
	85	—	6	30
	120	—	—	—
6	25 - 35	30	30	30
	45	16	30	30
	70	—	—	30
	85	—	—	13
	120	—	—	—
2 to 6	HM 25 C	30	—	—

* This table is for systems comprised of appliances with identical power. For any other configuration, please refer to your ACV representative.

**Dn 150/200 : Hor. = 150 mm, Vert.=200 mm

COMPONENTS FOR FLUE PIPE SYSTEM - HEATMASTER C, TC AND WATERMASTER APPLIANCES

Boiler Models	Connexion type	Material / Ø (mm)	Components *						
			Terminals	Pipes	Extensions	Bends	Measurement and condensate recovery	Accessories	Adapters
HeatMaster 25 C HeatMaster 25-35-45 TC WaterMaster 25-35-45	C93	PP Flex Ø 80	Set C93 Ø 80/125, (537D6287)	Flexible PP PP Ø 80, 25 m (537D6275)	—	—	—	• Connection sheath Alu for 80/125 (537D6266) • Connector Flex-Flex PP Ø 80 (537D6448)	—
HeatMaster 25 C HeatMaster 25-35-45 TC WaterMaster 25-35-45	C13 C33	PP - Galva Ø 80/125	• Roof Terminal (537D6184) • Wall terminal kit (537D6185) • Wall terminal Kit (10800301)	Lengths : • 250 mm (537D6186) • 500 mm (537D6187) • 1000 mm (537D6188) • 2000 mm (537D6516)	Sliding extension , straight (+ 50 to 130 mm) (537D6189)	• 43° - 45° (537D6190) • 87° - 90° (537D6191)	• Measuring Tube (537D6193) • Measuring T-piece with inspection (537D6229)	• Weather Slate Steep (537D6182) • Bracket Ø 125 mm (537D6183) • Weather salte, flat roof (Ø 390 mm) (537D6194)	• Expander SST/Alu Ø 80/125 mm - 2 x Ø 80 mm (537D6231) • Expander PP/ALU, Ø 60/100 mm - Ø 80/125 mm (537D6405)
HeatMaster 70-85-120 TC WaterMaster 70-85-120	C93	PP Flex Ø 100	Set C93 Ø 100/150, (537D6290)	Flexible PP Ø 100, 25 m (537D6271)	—	—	—	• Connection sheath Alu for Ø 100/150 (37D6267) • Adapter Flex-Flex PP Ø 100 (537D6451)	—

*** Designations and references (between brackets) are provided as information only. Please refer to the latest ACV price list for more information and the correct references.**

COMPONENTS FOR FLUE PIPE SYSTEM - HEATMASTER C, TC AND WATERMASTER APPLIANCES

Boiler Models	Connexion type	Materi-al / Ø (mm)	Components *						
			Terminals	Pipes	Extensions	Bends	Measurement and condensate recovery	Accessories	Adapters
HeatMaster 70-85-120 TC WaterMaster 70-85-120	C13 C33	PP - Galva Ø 100/150	• Roof Terminal (537D6300) • Wall terminal kit (537D6301)	Lengths : • 250 mm (537D6302) • 500 mm (537D6303) • 1000 mm (537D6304) • 2000 mm (537D6517)	Sliding extension, straight (+ 50 to 130 mm) (537D6305)	• 43° - 45° (537D6306) • 87° - 90° (537D6307)	• Measuring Tube (537D6308) • Measuring T-piece with inspection (537D6310)	• Weather Slate Steep 25°-45° (537D6209) • Bracket Ø 150 mm (537D6210) • Weather Slate, Flat roof (Ø 430 mm) (537D6208)	Concentric to parallel Ø 100/150 mm - 2 x Ø 100 mm (537D6207)
HeatMaster 70-85-120 TC WaterMaster 70-85-120	B23P C53	SST Ø 150	• Roof Terminal , flue Ø 150 (537D6211) • Wall terminal kit , flue, Ø 150 (537D6212) • Wall terminal kit, air, Ø 100 (537D6213)	Lengths, flue, Ø 150 : • 250 mm (537D6214) • 500 mm (537D6215) • 1000 mm (537D6216) Length, air, PVC Ø 100 : • 500 mm (537D6217)	Sliding extension, flue, Ø 150 (537D6218)	• Flue, Ø 150, 45° (537D6219) • Flue, Ø 150, 90° (537D6220) • Air, Ø 100, 45° (537D6221) • Air, Ø 100, 90° (537D6222)	Element for measure-ment and recovery of condensates, flue, Ø 150 (537D6223)	• Weather Slate Steep 25°-45° (537D6209) • Bracket Ø 150 mm (537D6210) • Weather Slate, Flat roof (Ø 430 mm) (537D6208)	• Expander Ø 100 - Ø 150 mm mandatory (537D6293) • Concentric to parallel adapter Ø 100/150 mm - 2 x Ø 100 mm (537D6207) • Adapter Ø 80 - Ø 100 mm, air (537D6172)
HeatMaster 70-85-120 TC WaterMaster 70-85-120	C13 C33	SST - SST Ø 100/150	• Roof Terminal, (537D6197) • Wall terminal (537D6198)	Lengths : • 250 mm (537D6199) • 500 mm (537D6200) • 1000 mm (537D6201)	Sliding extension (280 to 395 mm) (537D6202)	• 43° - 45° (537D6203) • 87° - 90° (537D6204)	Element for measurement and recovery of conden-sates, flue, (537D6226)	• Weather Slate Steep 25°-45° (537D6209) • Bracket Ø 150 mm (537D6210) • Weather Slate, Flat roof (Ø 430 mm) (537D6208)	Concentric to parallel adapter Ø 100/150 mm - 2 x Ø 100 mm (537D6207)

*** Designations and references (between brackets) are provided as information only. Please refer to the latest ACV price list for more information and the correct references.**

CHIMNEY CONNECTION CHARACTERISTICS

Main Characteristics			HM201
Air/flue pipe Ø	Parallel	mm	250
Max. allowed flue pipe pressure drop		Pa	130
Max recommended length (corresponding length in meters of straight pipes)			12 m
Available connection types			B23 - B23P - C53(x)

FLUE PIPE CONNECTION TYPES

It is mandatory to use ACV flue systems to connect the appliance.

B23 : Connection to an exhaust duct that discharges the combustion products outside the room where it is installed, with the combustion air being drawn directly from the boiler room.

B23P: : Connection to a combustion product exhaust system designed to operate with positive pressure.

C53(x) : Connection to separate ducts for supplying combustion air and discharging combustion products; these ducts may end in zones with different pressure levels, but are not allowed to be installed on opposite walls of the building.

Make sure that the combustion air openings remain unobstructed at all times. Failure to comply can result in serious damage, injury or death.

It is mandatory to ventilate the boiler room. The high or low air vent opening dimensions depend on the appliance power and the boiler room size. Refer to the local regulations in force.

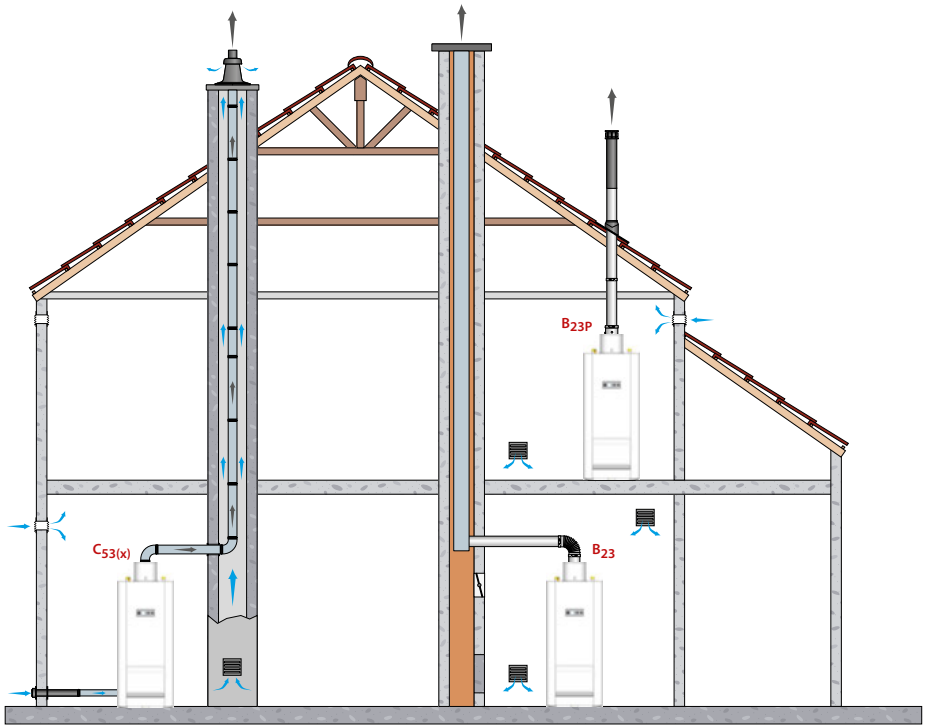

THE INSTALLER'S HANDBOOK FOR HEATING SYSTEMS CONTROLLED WITH ACVMAX

VOLUME 5
Troubleshooting

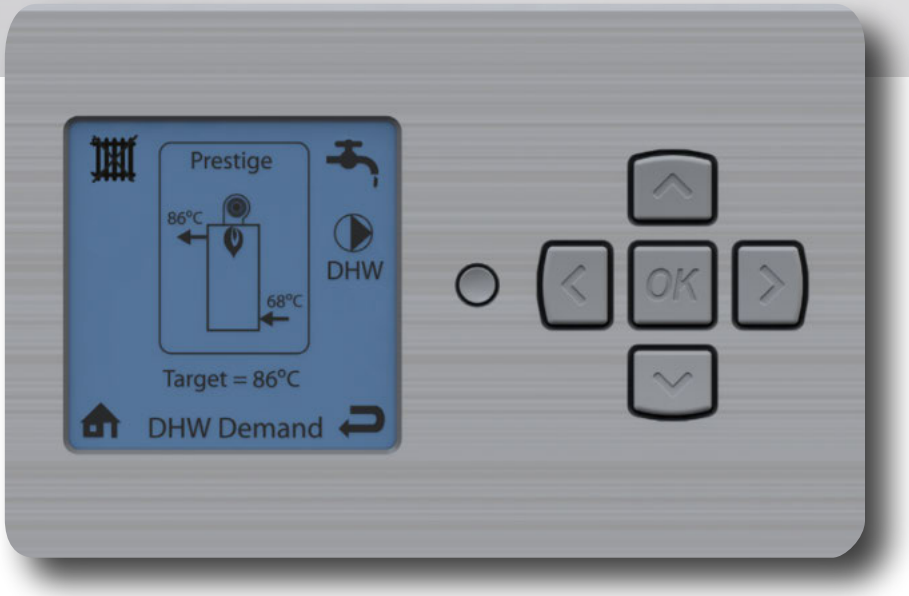

Prestige 24 - 32 Solo /Excellence
Prestige 42 - 50 - 75 - 100 - 120 Solo
HeatMaster 25 C
HeatMaster 25 - 35 - 45 - 70 - 85 - 120 TC
WaterMaster 25 - 35 - 45 - 70 - 85 - 120
HeatMaster 201

Applicable to appliances manufactured from March 2019, equipped with at least software version (DSP) 4.04

EXCELLENCE IN HOT WATER ACV

VOLUME 5 - TROUBLESHOOTING

BLOCKAGE AND ERROR CODES 5-3

Codes	Description of the fault	Solution for the fault
E 01	**Failed ignition**: The burner failed to light after 5 ignition attempts.	1. Check gas supply to appliance. 2. Check Ignition cable connection in control box. 3. Check electrode for defects, and distance between the pins. 4. Check gas valve and electrical connections to gas valve.
E 02	**False flame:** Flame detected prior to ignition.	1. Check good electrical ground connection to unit. 2. Check electrode for pollution and deposition of dirt.
E 03	**High Boiler temp.** : The boiler temperature exceeds 105°C	Correct condition which caused high temperature or limit to open. 1. Check water flow in the system (radiator valves). 2. Check Pump and pump electrical connections.
E 05	**Blower speed**: Blower speed not correct or speed signal is not received by ACVMax.	1. Check blower and wiring harness. 2. Under normal condition if actual fan speed is 1000 rpm different from set fan speed an error is displayed (after 60sec in running and after 30 sec. at startup). 3. Only exception when actual fan speed > 3000 rpm at max. PWM.
E 07	**High Flue temp.**: Flue temperature exceeds high limit.	1. Heat exchanger may require cleaning. 2. Appliance will automatically reset once flue temperature returns to normal range.
E 08	**Flame Circuit Error**: Flame circuit test failed	1. Turn appliance off. 2. Check and clean the electrode. 3. Check ignition and grounding cables are firmly connected.
E 09	**Gas valve circuit error**: Gas valve circuit test failed.	1. Check the gas valve and wiring harness. 2. If the problem persists replace the "ACVMax" circuit board.
E 12	**Internal Fault**: EEPROM misconfiguration	1. Turn unit off and on to resume normal operation. 2. If the problem persists replace the "ACVMax" circuit board.
E 13	**Reset limit reached**: Resets are limited to 5 every 15 minutes.	1. Turn unit off and on to resume normal operation. 2. If the problem persists replace the "ACVMax" circuit board.
E 15	**Sensor Drift**: Supply or return sensor reading has drifted.	Check supply and return temperature sensors and wiring harness.
E 16	**Supply Sensor Stuck**: Supply sensor reading is not changing.	1. Check supply temperature sensor and wiring harness for shortcuts or other defects. 2. Check waterflow and the temperature balance in the system, because CH supply temperature does not change.
E 17	**Return Sensor Stuck**: Return sensor reading is not changing.	1. Check return temperature sensor and its position, check wiring harness for shortcuts or other defects. 2. Check waterflow and the temperature balance in the system, because CH return temperature does not change. 3. Failure may happen at low output capacity when supplying from a big tank !
E 18	**Sensor Failure**: Supply or return sensor reading changed very rapidly.	Check supply and return temperature sensors and wiring harness.
E19	**Flame Failure**: Flame failure during start up phase	Flame loss after start up of the appliance. 1. Check the flue system for blockage and check the adjustment of the appliance (CO_2 high 8.8 +/-0.2%, CO_2 low 8.6+/-0.2% measured with front casing open). 2. Also check the Ignition / Ionisation rod (distance to the burner / pollution)
E 21	**Internal Control Fault**: A / D conversion error.	Turn unit off and on then press OK to resume normal operation.
E 25	**Internal Control Fault**: CRC check error.	Turn unit off and on to resume normal operation.
E 30	**Supply Sensor Shorted**: A short circuit has been detected in the appliance supply temperature sensor circuit	1. Check supply temperature sensor and wiring harness for a short circuit. 2. If necessary replace the sensor, or the wire harness. 3. After fixing the problem, reset the appliance and resume normal operation.

BLOCKAGE AND ERROR CODES

Codes	Description of the fault	Solution for the fault
E 31	**Supply Sensor Open**: An open circuit has been detected in the appliance supply temperature sensor circuit	1. Check supply temperature sensor, connectors and wiring harness for an open circuit. 2. If necessary replace the sensor, or the wire harness. 3. After fixing the problem reset the appliance and resume normal operation.
E 32	**DHW Sensor Shorted:** A short circuit has been detected in the DHW temperature sensor circuit	1. Check DHW temperature sensor and wiring harness for a short circuit. 2. If necessary replace the sensor, or the wire harness. 3. After fixing the problem reset the appliance and resume normal operation.
E 33	**DHW Sensor Open**: An open circuit has been detected in the DHW temperature sensor circuit	1. Check DHW temperature sensor, connectors and wiring harness for an open circuit. 2. If necessary replace the sensor, or the wire harness. 3. After fixing the problem reset the appliance and resume normal operation.
E 34	**Low Voltage**: Line voltage has fallen below an acceptable operating level.	The appliance will automatically reset once line voltage returns to normal.
E 37	**Low Water:** Water level has fallen below 0.7 bar.	1. Increase pressure to normal range. 2. The appliance will automatically reset once water level returns to normal.
E 43	**Return Sensor Shorted**: A short circuit has been detected in the appliance return temperature sensor circuit.	1. Check return temperature sensor and wiring harness for a short circuit. 2. If necessary replace the sensor, or the wire harness. 3. After fixing the problem, reset the appliance and resume normal operation.
E 44	**Return Sensor Open**: An open circuit has been detected in the appliance return temperature sensor circuit.	1. Check return temperature sensor, connectors and wiring harness for an open circuit. 2. If necessary replace the sensor, or the wire harness. 3. After fixing the problem, reset the appliance and resume normal operation.
E 45	**Flue Sensor Shorted**: A short circuit has been detected in the appliance flue temperature sensor circuit	1. Check flue temperature sensor and wiring harness for a short circuit. 2. If necessary replace the sensor, or the wire harness. 3. After fixing the problem reset the appliance and resume normal operation.
E 46	**Flue Sensor Open**: An open circuit has been detected in the appliance flue temperature sensor circuit.	1. Check flue temperature sensor, connectors and wiring harness for an open circuit. 2. If necessary replace the sensor, or the wire harness. 3. After fixing the problem reset the appliance and resume normal operation.
E47	**Water pressure sensor error**: Water pressure sensor is disconnected or broken	1. Check water pressure sensor, connectors and wiring harness. 2. If necessary replace the sensor, or the wire harness. 3. After fixing the problem reset the appliance and resume normal operation.
E 76	**Gas pressure switch open**	1. Check both the static and the dynamic gas pressures. 2. Correct condition which caused the pressure switch to open 3. Appliance will automatically reset once the pressure switch is closed.
	External Limit Open: An external automatic reset appliance limit has opened.	1. Correct condition which caused limit to open. 2. Appliance will automatically reset once external limit closes
E 77	**High temperature mixing circuit**	Check if the mixing valve functions correctly.
E 78	**Mix circuit sensor shorted**	1. Check Mix circuit temp. sensor and wiring harness for a short circuit. 2. If necessary replace the sensor, or the wire harness. 3. After fixing the problem reset the appliance and resume normal operation.
E 79	**Mix-circuit sensor Open**	1. Check Mix circuit temp. sensor and wiring harness for an open circuit. 2. If necessary replace the sensor, or the wire harness. 3. After fixing the problem reset the appliance and resume normal operation.
E 80	**Return > Supply**: Return temperature is higher than supply temperature.	Confirm water flows in appliance return and out appliance supply.
E 81	**Sensor Drift**: Supply and return temperatures are not equal.	1. Check water is flowing through appliance. 2. Wait a few minutes for the water to equalise the temperature, the appliance will automatically reset once temperatures become equal. 3. If appliance doesn't reset, check the NTC's and check the wire harness, replace if necessary.

Codes	Description of the fault	Solution for the fault
E82	**Delta T protection blocking** - Delta T too high	1. Verify flow in the system. 2. Check pump for blockage and obstructions, unblock it as required. Replace if neccessary.
E83	**Delta T protection Lock-out** - Lock-out due to Delta T value.	1. Verify flow in the system. 2. Check pump for blockage and obstructions, unblock it as required. Replace if neccessary.
E 85	**Pump operation: warning** - Appliance pump is running out of limits.	Pump is running out of its limits. Check pump for blockage and obstructions, replace if neccessary
E 86	**Pump hard fault**: Pump Failure	Pump Failure, check if pump PWM-feedback wire is properly connected, replace pump when neccessary
E 87	**External Limit Open**: An external appliance limit has opened.	1. Correct condition which caused limit to open, then reset appliance. 2. The appliance needs to be reset once external limit closes.
E88	**Pump Blocking**: Pump attempts to restart.	Check pump for blockage and obstructions, unblock it as required. Replace if neccessary.
E 89	**Incorrect Setting**: A parameter setting is outside the settings range.	1. Review CH & DHW settings and correct as necessary. 2. The appliance will automatically reset once corrected.
E 90	**Firmware Mismatch**: Control module and display firmware versions are incompatible.	One or several components are not compatible with the system. Replace mismatched component(s).
E 91	**System Sensor Shorted**: A short circuit has been detected in the system temperature sensor circuit	1. Check system temperature sensor and wiring for a short circuit. 2. If necessary replace the sensor, or the wire harness. 3. After fixing the problem reset the appliance and resume normal operation.
E 92	**System Sensor Open**: An open circuit has been detected in the system temperature sensor circuit.	1. Check system temperature sensor and wiring for an open circuit. 2. If necessary replace the sensor, or the wire harness. 3. After fixing the problem reset the appliance and resume normal operation.
E 93	**Outdoor Sensor Shorted**: A short circuit has been detected in the outdoor temperature sensor circuit.	1. Check outdoor temperature sensor and wiring for a short circuit. 2. If necessary replace the sensor, or the wire harness. 3. After fixing the problem reset the appliance and resume normal operation.
E 94	**Internal Display Fault**: Display memory error	Turn unit off and on to resume normal operation.
E 95	**Supply Sensor Error**: Supply sensor reading is invalid	1. Check wiring between display and control module. 2. If necessary replace the sensor, or the wire harness. 3. After fixing the problem reset the appliance and resume normal operation.
E 96	**Outdoor Sensor Open**: An open circuit has been detected in the outdoor temperature sensor circuit.	1. Check outdoor temperature sensor and wiring for an open circuit. 2. If necessary replace the sensor, or the wire harness. 3. After fixing the problem reset the appliance and resume normal operation.
E 97	**Cascade Mismatch**: Cascade configuration has changed.	1. Run autodetection if change was intentional, or else check wiring between appliances. 2. Appliance will automatically reset once repaired.
E 98	**Cascade Bus Error**: Communication with other appliances has been lost.	1. Check wiring between appliances. 2. Appliance will automatically reset once repaired.
E 99	**Controller Bus Error**: Communication between appliance display and control module has been lost.	1. Check wiring between components. 2. Appliance will automatically reset once repaired.