EVO S

Frame and Header Kit

80, 100, 120, 150
80P, 100P, 120P

INSTRUCTIONS

When replacing any part on this appliance, use only spare parts that you can be assured conform to the safety and performance specification that we require. Do not use reconditioned or copy parts that have not been clearly authorised by ACV.

For the very latest copy of literature for specification and maintenance practices visit our website www/acv/com/gb where you can download the relevant information in PDF format.

06/2023
UIN 236071 A03

This kit is suitable for the following boilers:

Evo S 80,100,120 & 150 using Natural Gas and 80P, 100P & 120P using Propane

CONTENTS

1 Introduction.....3

2 General Description of Systems 3

3 Multiple Boiler System Components 6

4 Frame Kit Installation Procedure 9

5 Header Kit Assembly.....10

6 Installation Drawings for Multiple Boiler Systems 13

7 Electrical Connections & Wiring Diagram.....21

8 Commissioning and Testing.....23

IMPORTANT

THESE KITS CAN BE USED IN CONJUNCTION WITH LOW LOSS HEADERS & PLATE HEAT EXCHANGERS SUPPLIED AS PART OF THE EVO S OPTIONS RANGE

1 INTRODUCTION

This technical data contains information for dimensioning & assembly of a cascade system kit for the Evo S.

Frame and header kits are available 'in line' configurations only.

GENERAL DESCRIPTION OF FRAME & HEADER KITS

A requirement to spread the total required heat output over several boilers can be accommodated by the use of the ACV multiple boiler frame & header kit options.

All headers and pipe work should be insulated in accordance with the Non Domestic Building Services Compliance Guide. To ensure compliance with the maximum heat loss criteria, insulation thickness should be calculated according to BS EN ISO 12241 using standardised assumptions.

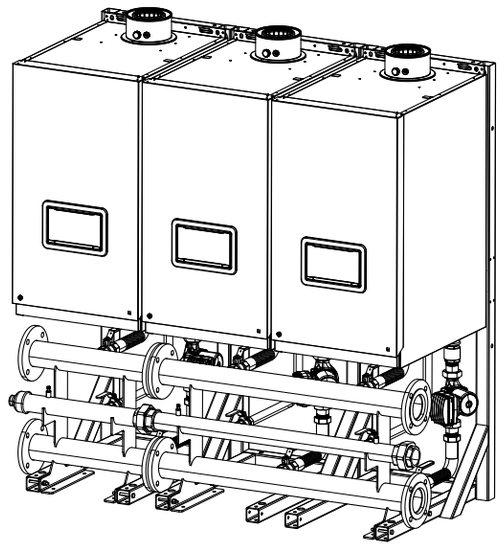

2 GENERAL DESCRIPTION OF SYSTEMS

2.1 FRAME AND HEADER KIT DESIGN OPTIONS

The Evo S boilers are suitable for use in a multiple boiler configuration. The Evo S multiple boiler system is available in side by side and giving the opportunity to choose the optimum footprint size or wall space for a given output. 80-150 kW kits include the support frame. Boilers can be wall mounted required.

Table 1 80-120 kW

Available Rig Configurations	Total Output Required kW	Number of boilers and Frames	Footprint Size W x D x H (mm)	Frame and Header Kit	
	Range			Size	Prod. No
Single Frame Configurations	80-120	1	500 x 704 x 1535	DN80	XB150011
Twin Frame Configurations	160-240	2	1000 x 704 x 1535	DN80	XB150012
Triple Frame Configurations	240-360	3	1500 x 704 x 1535	DN80	XB150013
Quad Frame Configurations	320-480	4	2000 x 704 x 1535	DN80	XB150014
Five Frame Configurations	400-600	5	2500 x 704 x 1535	DN80	XB150015
Six Frame Configurations	480-600	6*	3000 x 704 x 1535	DN80	XB150016

* Max 6 x 100 kW only. **H**=Height from floor to top of frame, **D**=Depth from installed wall to front of kit, **W**=Width of installed kit
** See Table 6 for Gas Header sizing.

Table 2 150 kW only

Available Rig Configurations	Total Output Required kW	No of boilers and Frames	Footprint Size W x D x H (mm)	Size	Frame and Header Kit	
	Range				No sep/ LLH	PHEX sep
Single Frame Configurations	150	1	500 x 794 x 1830	DN100	XB150017	XB150023
Twin Frame Configurations	300	2	1000 x 794 x 1830	DN100	XB150018	XB150024
Triple Frame Configurations	450	3	1500 x 794 x 1830	DN100	XB150019	XB150025
Quad Frame Configurations	600	4	2000 x 794 x 1830	DN100	XB150020	XB150026
Five Frame Configurations	750	5	2500 x 794 x 1830	DN100	XB150021	XB150027
Six Frame Configurations	900	6	3000 x 794 x 1830	DN100	XB150022	XB150028

Note. All boilers need to be sized in accordance to the total required heat load and the modulation capabilities of the appliances.
** See Table 6 for Gas Header sizing.

Table 3 Available Evo S Boilers

kW	Product No.
Evo S 80	100008264400
Evo S 100	100008264500
Evo S 120	100008264600
Evo S 150	100008264700

Table 4 Low Loss Header Accessories

DN80	DN100
XB150030	XB150031

continued . . . . .

System separation PHEX kits are offered at the below kW ratings and are supplied with suitable pipe spools for connection to frame and header kits.

Table 5 System Separation PHEX Kits

Product Number	Frame and Header Size	PHEX kW
XB150038	DN80	150
XB150039	DN80	300
XB150040	DN80	450
XB150041	DN80	300
XB150042	DN100	300
XB150043	DN100	450
XB150044	DN100	600
XB150045	DN100	750
XB150046	DN100	900

Table 6 Gas Header Size / Cascade

Boiler	Water Header Size	4-Wide	5-Wide	6-Wide
Evo S 80	DN80	2"	3"	3"
Evo S 100	DN80	2"	3"	3"
Evo S 120	DN80	3"	3"	3"
Evo S 150	DN100	3"	3"	3"

2.2 MULTIPLE BOILER INSTALLATIONS

The product range includes water and gas headers capable of assembly using threaded socket, compression and PN6 flange connections.

2.3 HYDRONIC ISOLATION: LOW LOSS HEADER & PLATE HEAT EXCHANGER

A low loss header or plate heat exchanger allows flow separation within a hydronic system.

This allows two flow circuits to operate with their own flow and pressure drop environments whilst effectively transferring heat to its adjoined water circuit.

This enables the modern high resistant, high efficiency boilers to operate under their optimum conditions, while the main heating circuit operates to its own controlled optimum requirements.

2.4 OUTPUT CONTROL

All pumps should be wired to the appliance to allow a controlled pump over run.

If using an external pump control system the capability of a timed pump over run signal provided by the appliance must be maintained at all times.

2.5 GAS SUPPLY

For Evo S the 80, 100, 120 & 150 boilers are configured for use with natural gas, or 80,100 & 120 running on Propane.

Connection to the gas supply must be in accordance to with all the applicable regulations.

The water header kits are supplied with a 2” or 3" gas header (see Table 6) and associated components and hoses to make the connection to the appliance.

Note. Test points are provided at each end of the gas headers.

It must be noted that the following pressure drops should be taken into consideration when sizing pipe dimensions and run lengths.

Table 7 Gas Line Pressure Drop (Natural Gas)

Boiler Model	Pressure Loss (mBar)
Evo S 40	< 0.9
Evo S 60	< 0.9
Evo S 70	< 0.9
Evo S 80	0.9
Evo S 100	1.4
Evo S 120	2
Evo S 150	2.85

Note.

1. Pressure drop is present within the dedicated gas header to boiler inlet pipework when supplied by ACV.
2. A minimum working pressure of 16.5 mBar should be available at the gas header test point.

2.6 ASSEMBLY

The frames must be located in a suitable place that affords a flat and level floor-area of suitable load bearing capacity. Care must be taken when locating the frames that space is available for the servicing, installation and maintenance of the appliance and all of the associated connections and equipment. (See Appliance manuals)

When using multiple frames they must be bolted together and secured to the floor.

2.7 SAFE HANDLING

Installation may require 2 or more operatives to move it to its installation site, remove it from its packaging base and during movement into its installation location. Manoeuvring may include the use of a sack truck and involve lifting, pushing and pulling.

Caution should be exercised during these operations.

Operatives should be knowledgeable in handling techniques when performing these tasks and the following precautions should be considered:

- Grip the boiler at the base.
- Be physically capable.
- Use personal protective equipment as appropriate, e.g. gloves, safety footwear.

During all manoeuvres and handling actions, every attempt should be made to ensure the following unless unavoidable and/or the weight is light:

- Keep back straight.
- Avoid twisting at the waist.
- Avoid upper body/top heavy bending.
- Always grip with the palm of the hand.
- Use designated hand holds.
- Keep load as close to the body as possible.
- Always use assistance if required.

3 MULTIPLE BOILER SYSTEM COMPONENTS

3.1 GENERAL

The multiple boiler systems consist of the following components:

- Pipekit (1 and 2 wide configurations)
- Boiler gas header.
- Boiler flow and return headers supported on mounting skid
- Low loss mixing header (optional)
- Hardware pack (includes essential connection and valve components)
- Circuit extension kits (optional)
- Plate Heat exchanger kit (optional)
- Boiler pump

3.2 MAIN WATER HEADERS

The main water headers consist of: water flow, water return headers custom sized for all boilers. It is possible to extend the system to a maximum of 6 boilers in a linear configuration.

Each header kit provides water flow and return headers sized either DN80 or DN100 dependent on total maximum combined heating output required.

3.3 GAS HEADER

The Gas header consists of a custom manufactured 2” or 3" manifold. This is located in a cradle incorporated within the header mounting skid.

3.4 BOILER PUMP

Pump kits and External pump controls **(sold separately)** are designed to provide the optimum flow around the appliance water circuit ensuring the maximum flow rates are contained within the design constrains of the appliance.

3.5 BOILER WATER CONNECTION KITS

The connection kit contains the following components:

1. Boiler return leg complete with isolating valve, pump, non return valve, drain cock and fibre seals.
2. Boiler flow leg complete with isolating valve, pressure relief valve and fibre seals.
3. Header blanking flanges, fasteners and gaskets.
4. Mixing header fasteners and gasket.

FLOW

LEGEND
1. Isolation Valve
2. Boiler Flow Flexible Connection
3. 1 ¼” Male Parallel/Taper Hex Nipple
4. 1 ¼” x 1 ¼” x ¾” Tee
5. ¾” Taper Plug

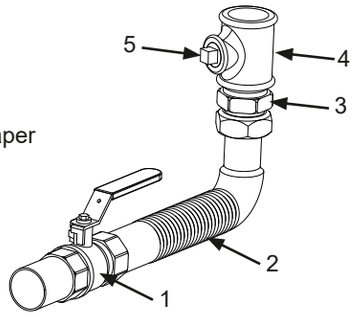

RETURN

LEGEND
1. Isolation Valve
2. Boiler Flow Flexible Connection
3. Pump Union
4. Pump inc Gaskets
5. Non Return Valve
6. 1 ¼” x 1 ¼” x ¾” Tee
7. Drain Cock

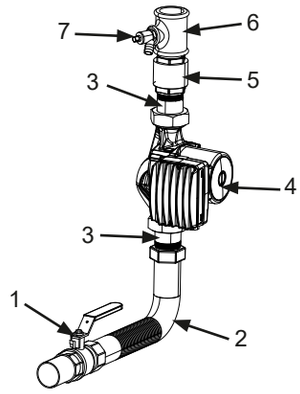

Figure 1. DN 80

LEGEND
1. Isolation Valve
2. 1 ¼” Male/Female Swivel Elbow
3. Boiler Flow Flexible Connection
4. 1 ¼” Male Parallel/Taper Hex Nipple
5. 1 ¼” x 1 ¼” x ¾” Tee
6. ¾” Taper Plug

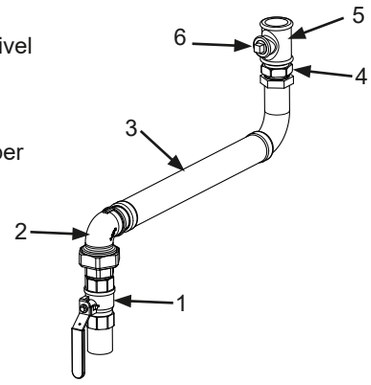

LEGEND
1. Isolation Valve
2. 1 ¼” Male/Female Mac Union
3. Boiler Flow Flexible Connection
4. Pump inc Gaskets
5. Flange Pump Adapter
6. 1 ¼” Male Parallel/Taper Hex Nipple
7. Non Return valve
8. 1 ¼” x 1 ¼” x ½” Tee
9. Drain Cock

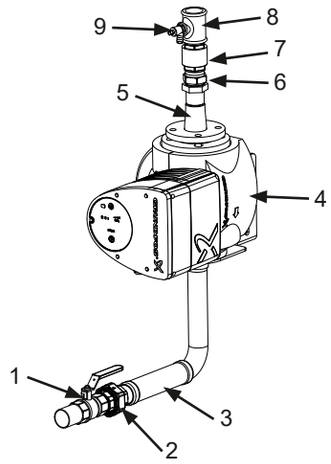

Figure 2. DN 100

3.6 BOILER GAS CONNECTION KITS

Table 8 Gas Line Pressure Drop (Natural Gas)

Item	2" Gas, 1 Wide	2" Gas, 2 Wide	3" Gas, 1 Wide	3" Gas, 2 Wide
Gas Header Pipe	1-No 2"	1-No 2"	1-No 3"	1-No 3"
Gas Hose	1-No 1"	2-No 1"	1-No 1"	2-No 1"
End Cap	2-No 2" threaded cap	2-No 2" threaded cap	N/A	N/A
Gas Blind Kit (Boxed)	1-No DN12 x 1/2" Taper Plug 1-No DN50-2" Mac Union 1-No DN50-2" to DN12-1/2" Reducer	1-No DN12 x 1/2" Taper Plug 1-No DN50-2" Mac Union 1-No DN50-2" to DN12-1/2" Reducer	1-No DN80 Blind Flange 2-No DN80 Gaskets 1-No Bolt Set (8-No M16 x 60)	1-No DN80 Blind Flange 2-No DN80 Gaskets 1-No Bolt Set (8-No M16 x 60)
Gas Adapter Kit (Bagged)	N/A	N/A	2-No Gas Adapter Brackets 4-No M10 x 30 Bolts 4-No M10 Plain Washers 4-No M10 HEX Nuts	2-No Gas Adapter Brackets 4-No M10 x 30 Bolts 4-No M10 Plain Washers 4-No M10 HEX Nuts

3.7 INSTALLATION AREA AND DIMENSIONS

Care must be taken to ensure adequate access for boiler / cascade system installation and servicing.

A minimum of 450 mm clearance must be provided from the front of the installed boilers in cascade to facilitate boiler servicing. Additional clearance must also be considered in the event of boiler replacement.

Consideration to connecting heating flow and return pipework, gas supply and condensate drainage must be given. Routing of the condensate drain must be made to allow a minimum fall of 1 in 20 away from the installed boilers in cascade, throughout its length. Adequate room above the boilers must be provided to install and service the boiler flue system. Further information with respect to flue and condensate drain connection is provided in the installation and servicing instructions provided within the boilers packaging carton.

IMPORTANT POINTS

Before commencing installation:

- The frames must stand on a flat and level floor of suitable load bearing capacity.
- The header must be bolted to the frame before the hoses are connected to the boiler.

MOUNTING FRAME MUST BE SECURED

TO THE FLOOR WITH BOLTS

Allowances must be made for installation where features are in place that may affect the nominal installation conditions.

4 FRAME KIT INSTALLATION PROCEDURE

4.1 SIDE BY SIDE FRAME KIT MOUNTING PROCEDURE

1. Place the frame kit sections in the required position and bolt them together at the top and bottom with the bolts, nuts and washers provided.

IMPORTANT: MOUNTING FRAME MUST BE SECURED TO THE FLOOR WITH BOLTS

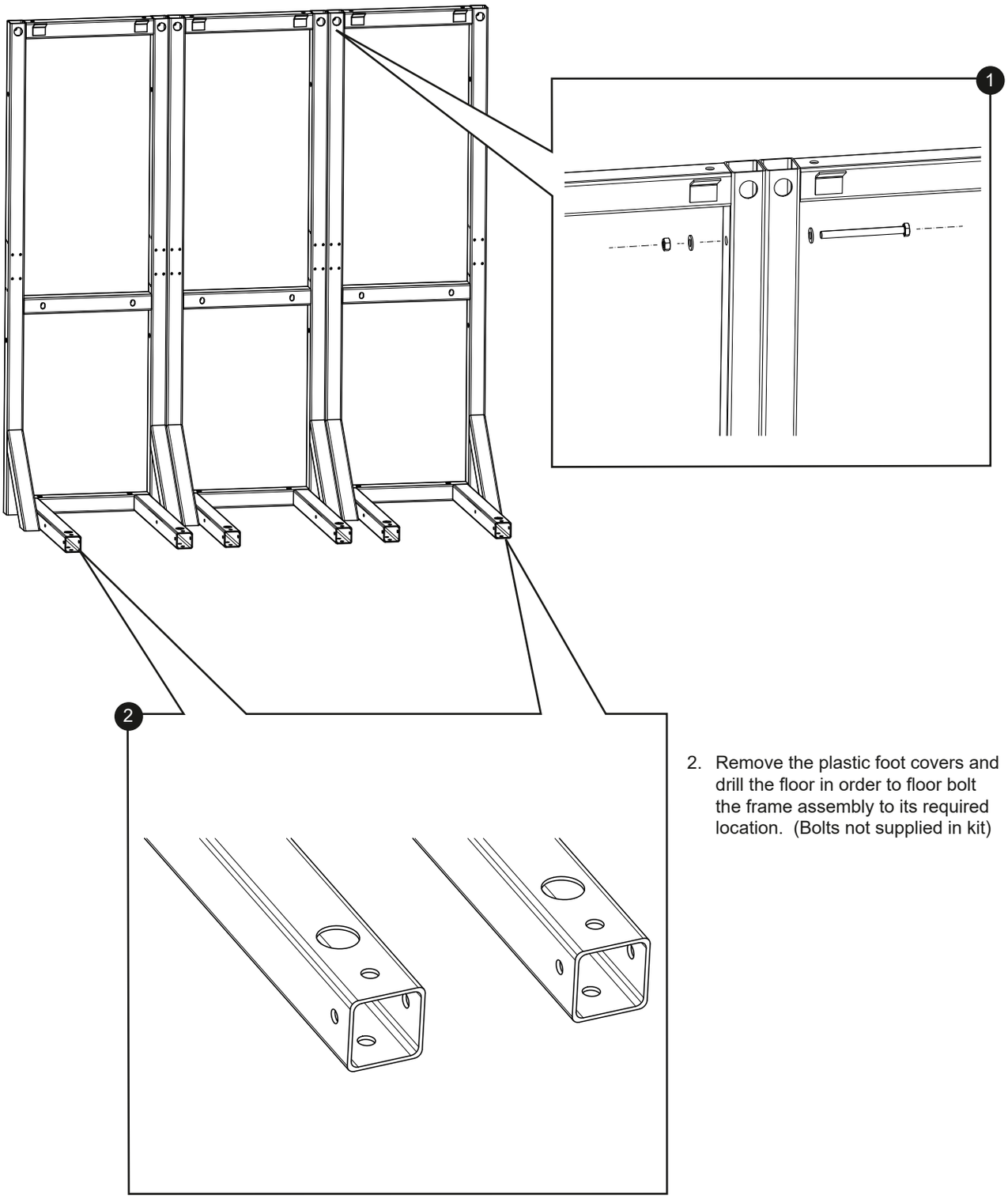

2. Remove the plastic foot covers and drill the floor in order to floor bolt the frame assembly to its required location. (Bolts not supplied in kit)

4.2 BOILER MOUNTING

1. As appropriate mount the boilers onto either the wall plates or the side by side pipekit.

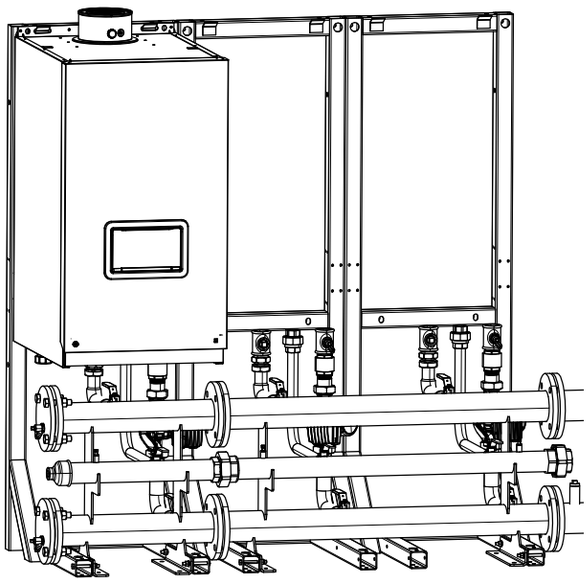

5 LOW LOSS HEADER ASSEMBLY (OPTIONAL ACCESSORY)

5.1 FITTING LOW LOSS HEADER AND BLANKING FLANGES

1. Fit the low loss header and blanking flanges in the chosen positions.

   Note. Low loss header can be located either LHS or RHS of the headers.

Blanking Flange

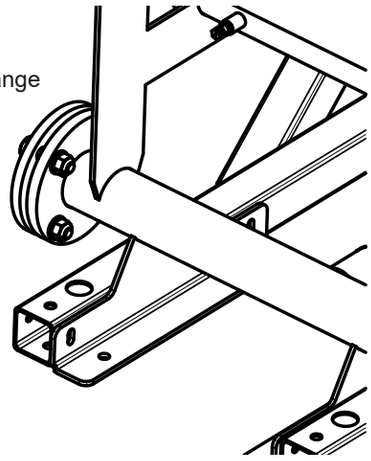

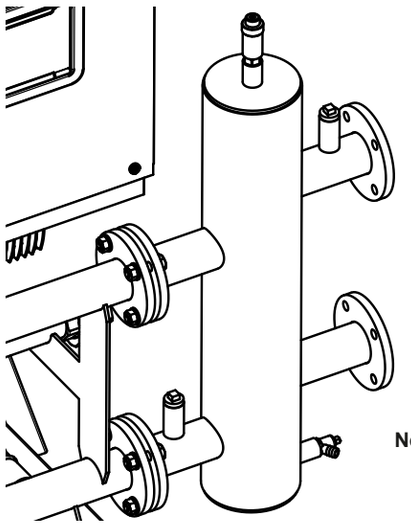

Low Loss Header

Note. For instructions relating to PHEX accessory, please see separate installation manual.

5.2 FITTING HEADER KIT ASSEMBLY (Steps 1 thru 5 are applicable to Magna 1 and UPMXXL)

1. Slide the header kit assembly between the frame legs but do not screw the header kit to the frame at this stage.
2. Screw the header feet to the frame feet with the bolts, nuts and washers provided – Do not tighten fully.

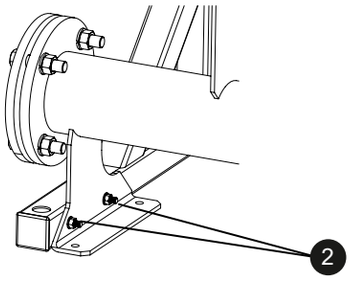

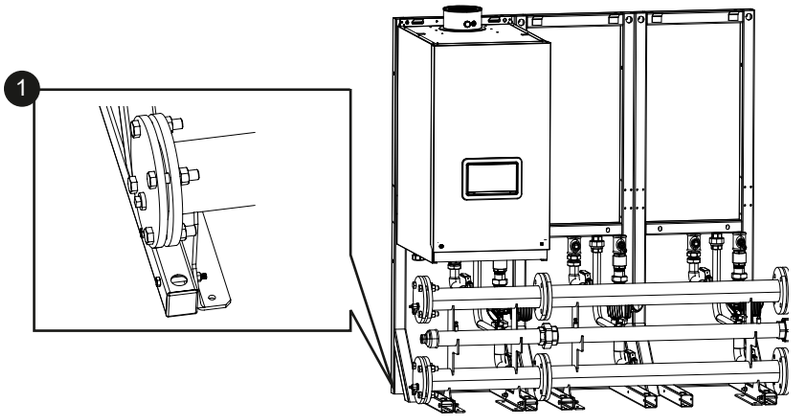

3. Connect the pump assembly to the boiler return connection using suitable jointing compound. Ensure orientation of the tee is appropriate for draining.
4. Connect the flow assembly to boiler flow connection using suitable jointing compound.

Magna 1 shown, UPMXXL similar (see next frame)

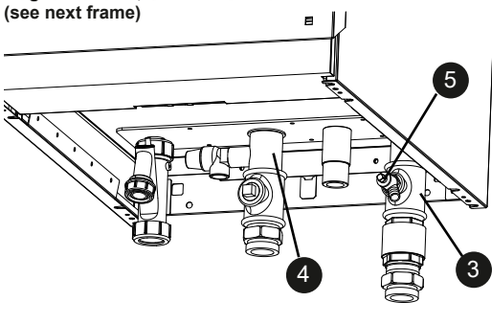

5. Fit drain valve into the ½" outlet of the tee on the return connection. Note this must be fitted after the tee is fitted to the boiler.

FOR UPMXXL DO STEPS 6, 7 AND 8 SHOWN ON NEXT PAGE (UPMXXL INSTRUCTIONS)

MAGNA 1 Continued...

6. Fit the Pump Adapter to the top side of the pump connection using the bolts and gaskets provided as a sub assembly.
7. Fit the pump and adapter to the boiler return connection using the sealing washers provided.
8. Fit the pump support plate to the frame and return hose, ensuring the support plate is on the underside of the flange then bolt to the pump flange.
9. Screw Return Hose into the return Mac Union using a suitable sealing compound and tighten the Mac Union.
10. Fit the hose into the elbow on the flow connection then Fit the flow flexible header connection to the flow connection using the sealing washers provided.
11. Mount gas header in correct position using locating brackets. 2" header sits in front of flow and return water pipes, 3" gas header sits behind water pipes.
12. Tighten header feet to frame feet bolts. Tighten bolts refer to step 2.

Magna 1 shown, UPMXXL similar (see next frame)

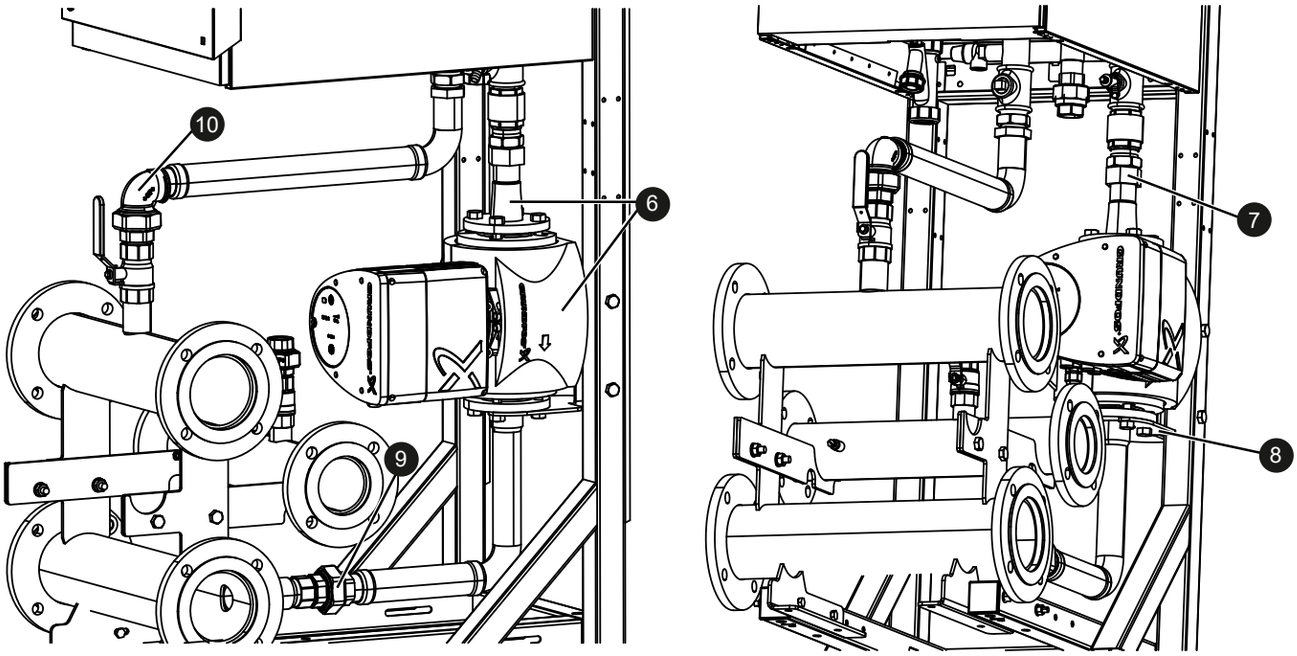

UPMXXL INSTRUCTIONS

6. Fit the pump to the boiler return connection using the gaskets provided.
7. Fit the two flexible header connections to the boiler pump connection and the flow connection using the sealing washers provided.
8. Tighten header feet to frame feet bolts.

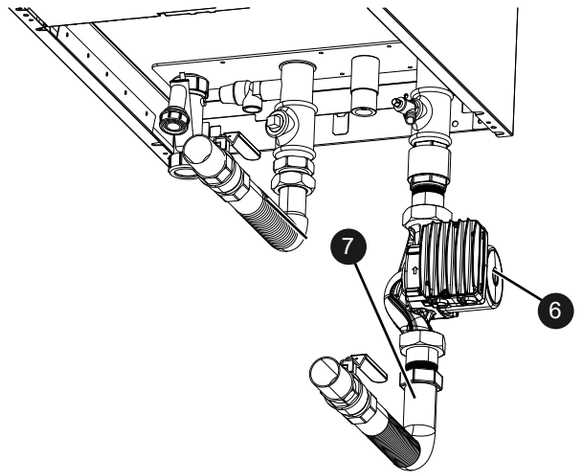

UPMXXL shown

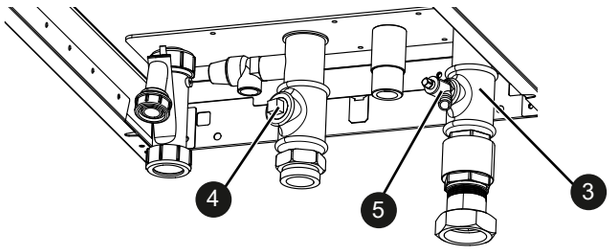

5.3 FITTING GAS CONNECTION

1. Fit the gas hose into the gas header using Gas Safe approved jointing compound.
2. Fit the 1" iron union to the gas connection on the underside of the boiler using Gas Safe approved jointing compound.
3. Fit the gas hose to the 1" union.
4. Ensure this is connection is gas tight.

Note. Gas Isolation Valve is supplied with the boiler.

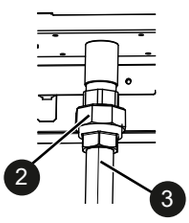

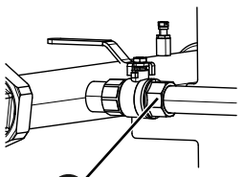

UPMXXL Pipe kit shown

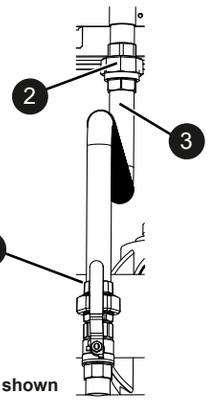

MAGNA 1 shown

5.4 PRESSURE RELIEF VALVE CONNECTION

1. Ensure each boiler pressure relief connection is piped to safety.

   Note. Flow connection removed for clarity.

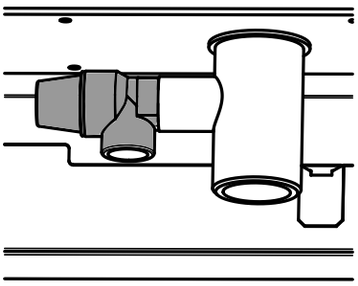

5.5 CONDENSATE SIPHON FITTING

1. Fit the condensate siphon to the boiler and pipe to drain following the recommendations contained in the boiler Installation instructions.

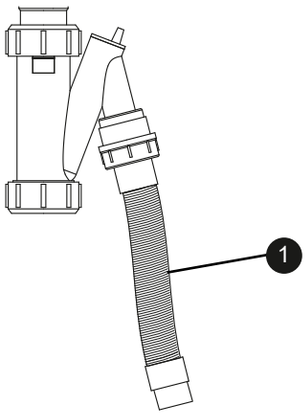

5.6 ASSEMBLE HEADER ONTO FRAME

1. Tighten the header bolts onto the frame.
2. Ensure that the test points on the gas header are accessible.
3. Test all gas joints to ensure they are gas tight and safe.

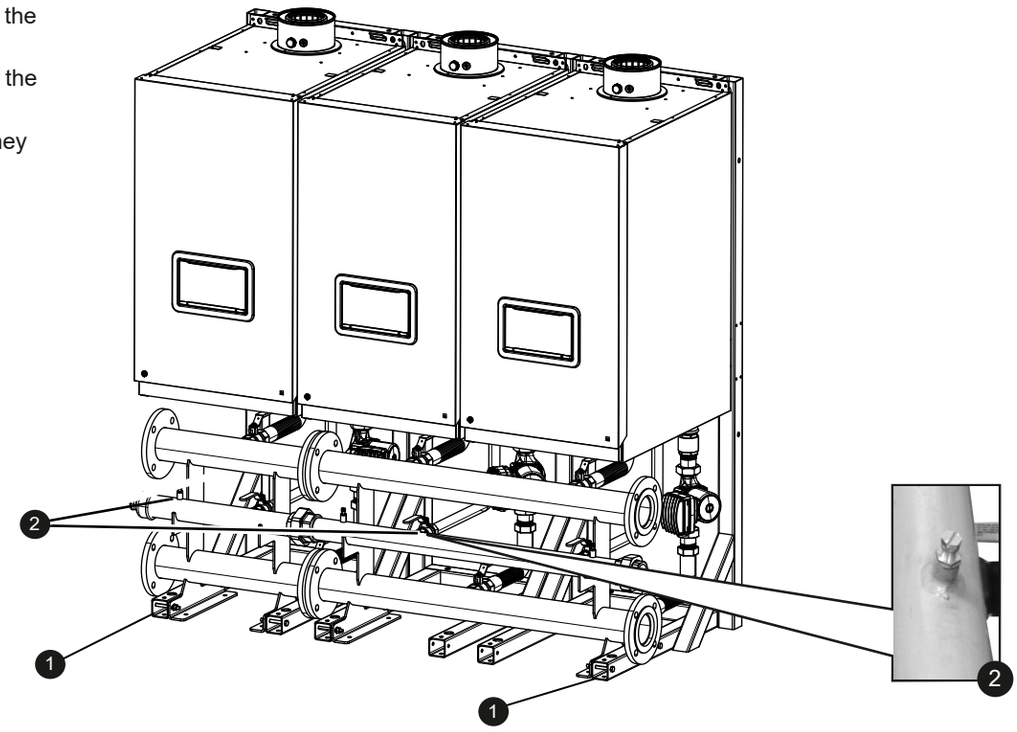

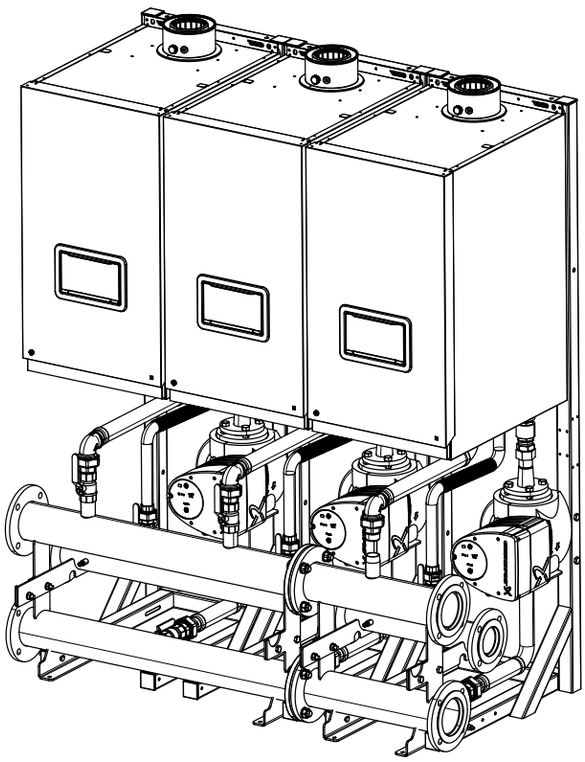

6 INSTALLATION DRAWINGS FOR MULTIPLE BOILER SYSTEMS

6.1 GENERAL

The multiple boiler systems are available in two formats:

- 2 to 6 boilers in a linear configuration, mounted on a wall.
- 2 to 6 boilers in a linear configuration, mounted on a free-standing frame.

The boiler side of the cascade systems is sized to water flow and return differential 20∆T.

6.2 SIDE BY SIDE FRAME KIT CONFIGURATION

6.2.1 INSTALLATION DRAWING WITH 1 - DN80 120 kW BOILER (OPTIONAL LOW LOSS HEADER SHOWN FOR INFORMATION)

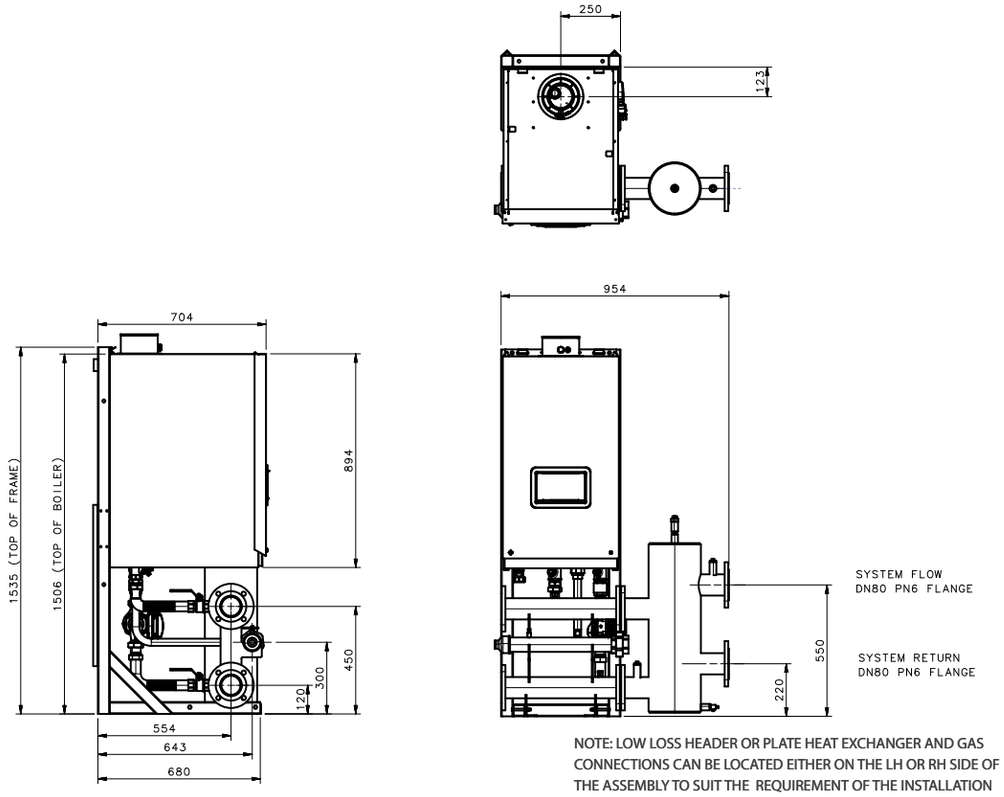

All dimensions in mm

6.2.2 INSTALLATION DRAWING WITH 1 - DN100 150 kW BOILER (OPTIONAL LOW LOSS HEADER SHOWN FOR INFORMATION)

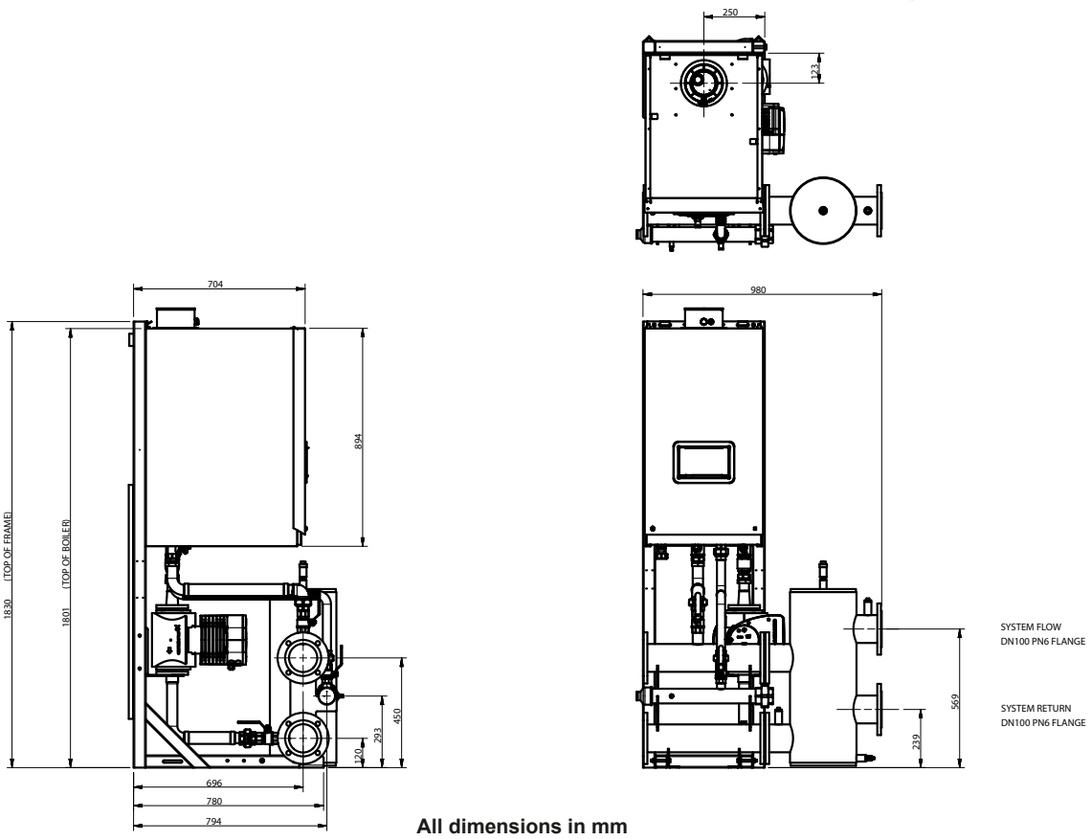

All dimensions in mm

6.2.3 INSTALLATION DRAWING WITH 2 - DN80 80-120 kW BOILERS (SIDE BY SIDE) (OPTIONAL LOW LOSS HEADER SHOWN FOR INFORMATION)

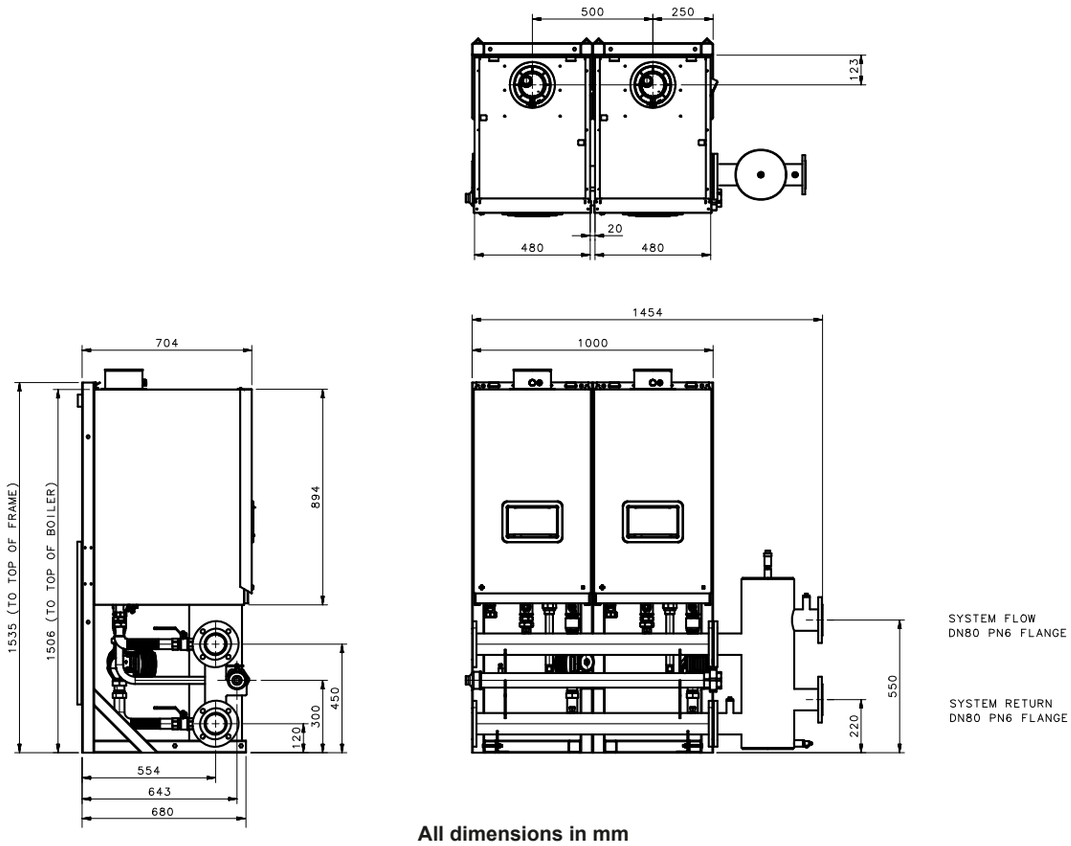

All dimensions in mm

6.2.4 INSTALLATION DRAWING WITH 2 - DN100 150 kW BOILERS (SIDE BY SIDE) (OPTIONAL LOW LOSS HEADER SHOWN FOR INFORMATION)

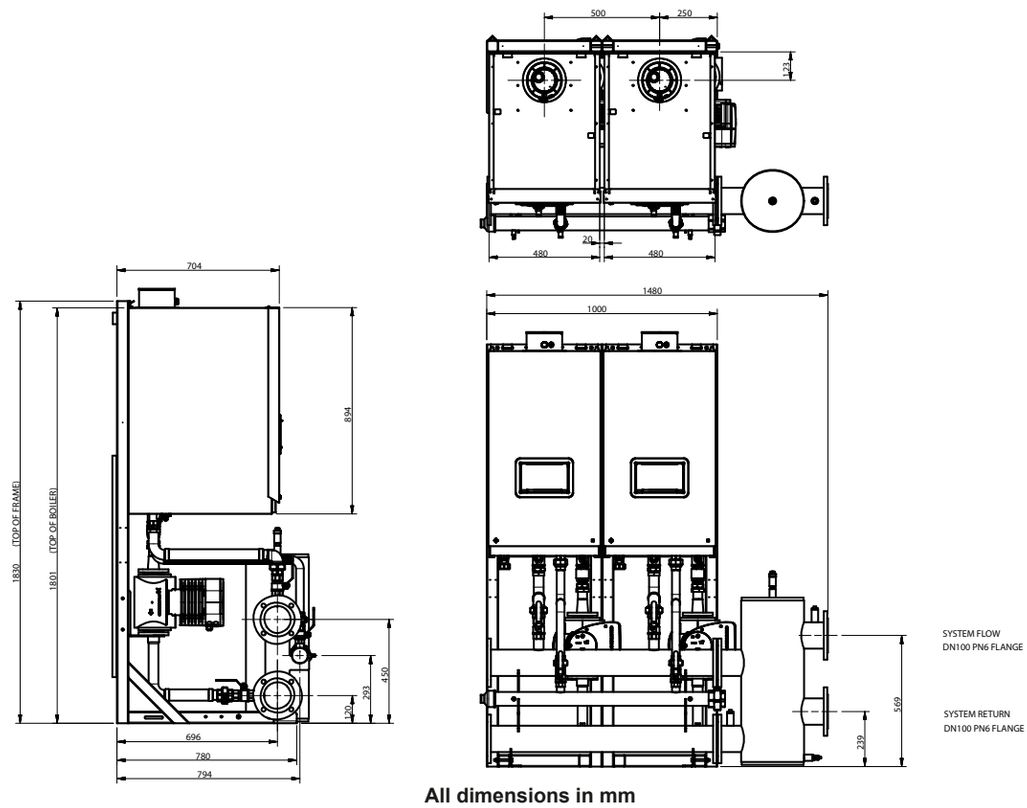

All dimensions in mm

6.2.5 INSTALLATION DRAWING WITH 3 – DN80 80-120 kW BOILERS (SIDE BY SIDE) (OPTIONAL LOW LOSS HEADER SHOWN FOR INFORMATION)

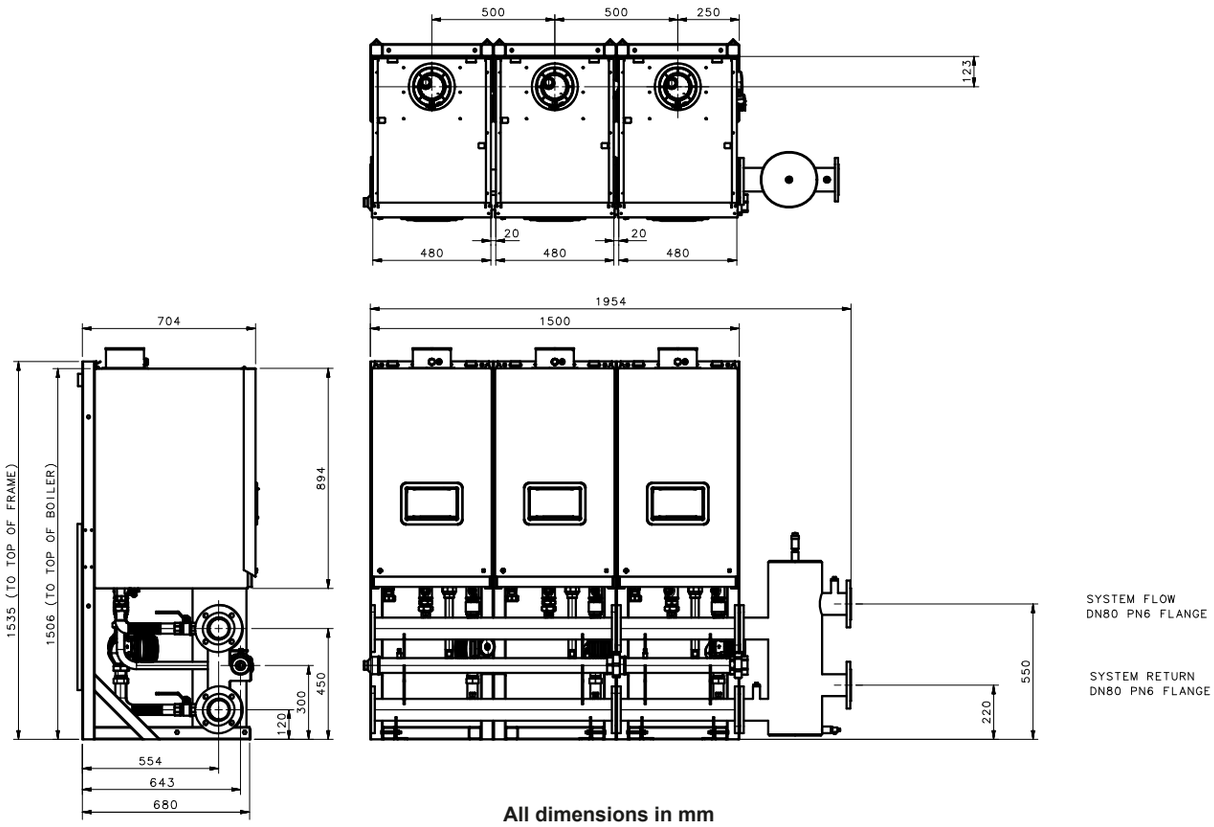

All dimensions in mm

6.2.6 INSTALLATION DRAWING WITH 3 – DN100 150 kW BOILERS (SIDE BY SIDE) (OPTIONAL LOW LOSS HEADER SHOWN FOR INFORMATION)

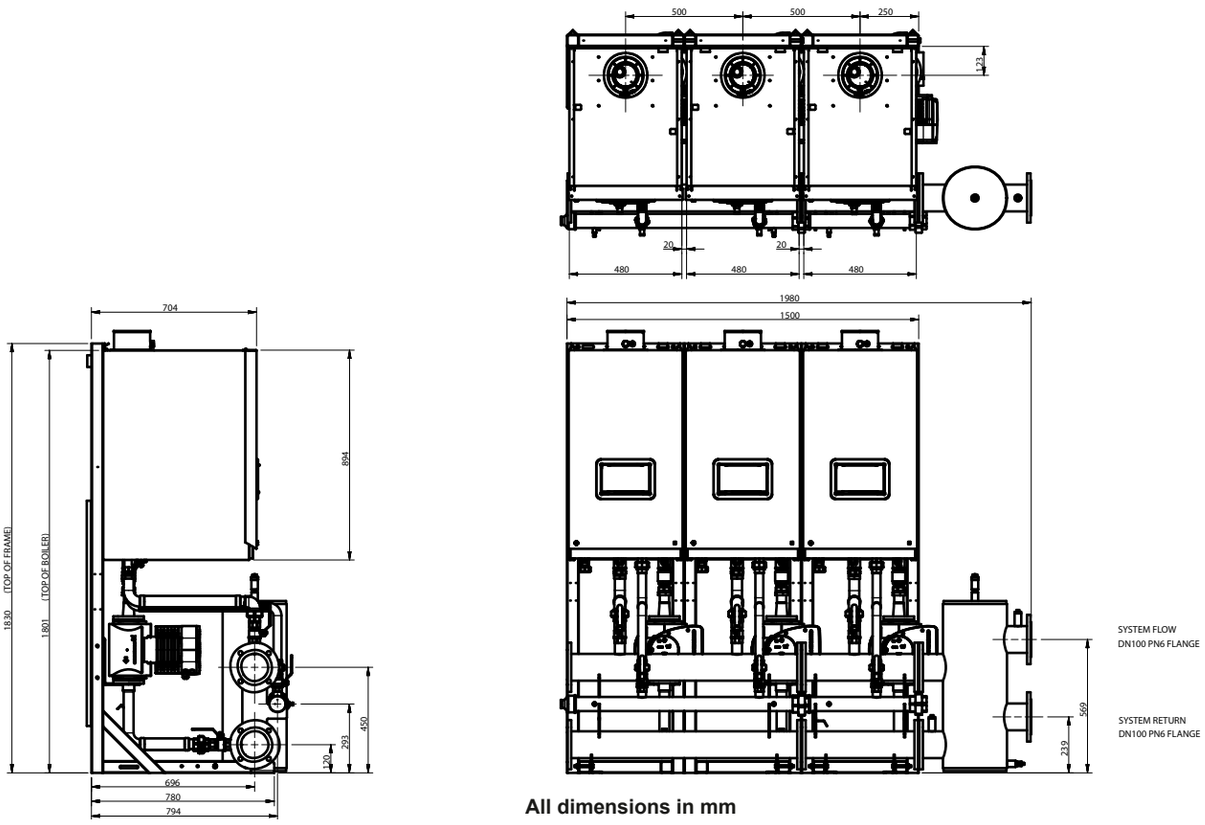

All dimensions in mm

6.2.7 INSTALLATION DRAWING WITH 4 – DN80 80-100 kW BOILERS (SIDE BY SIDE) (OPTIONAL LOW LOSS HEADER SHOWN FOR INFORMATION)

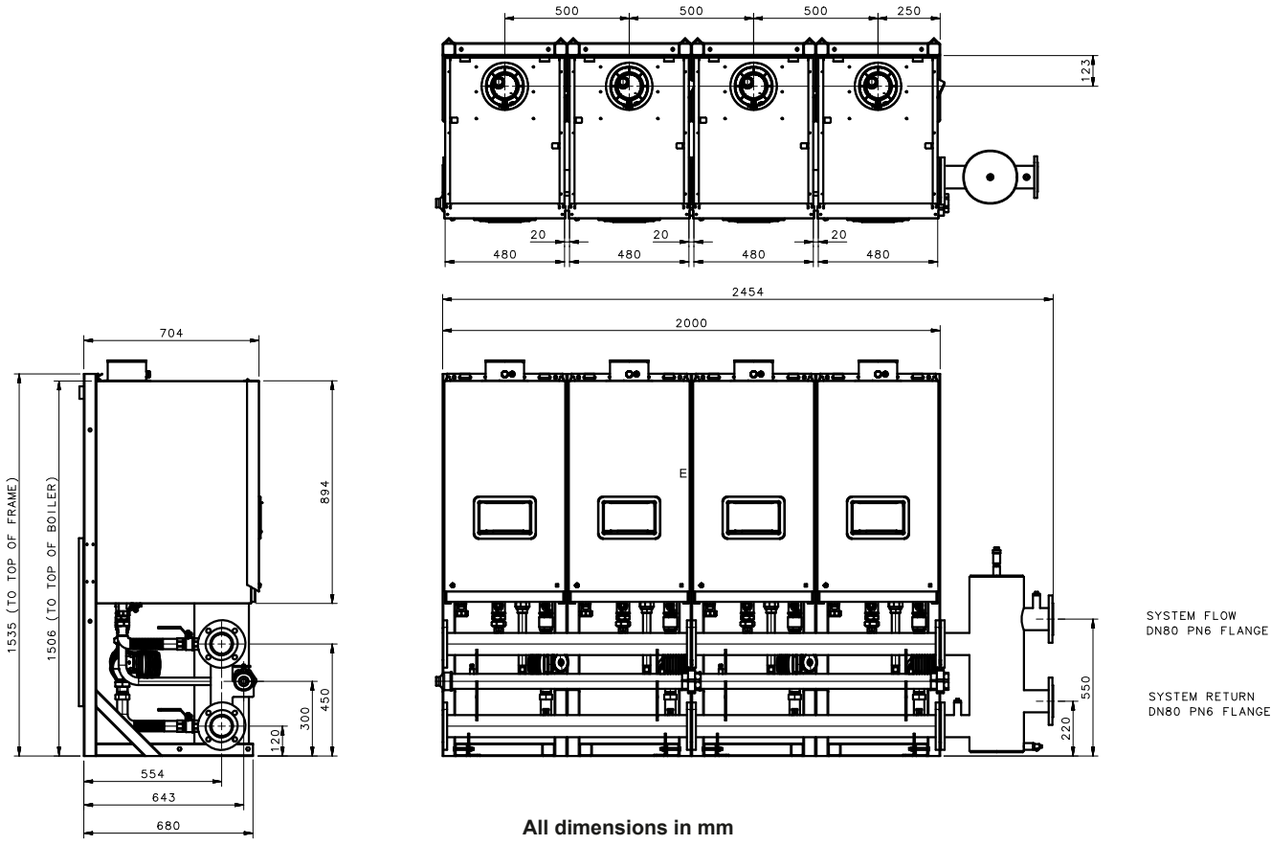

All dimensions in mm

6.2.8 INSTALLATION DRAWING WITH 4 – DN80 120 kW BOILERS (SIDE BY SIDE) (OPTIONAL LOW LOSS HEADER SHOWN FOR INFORMATION)

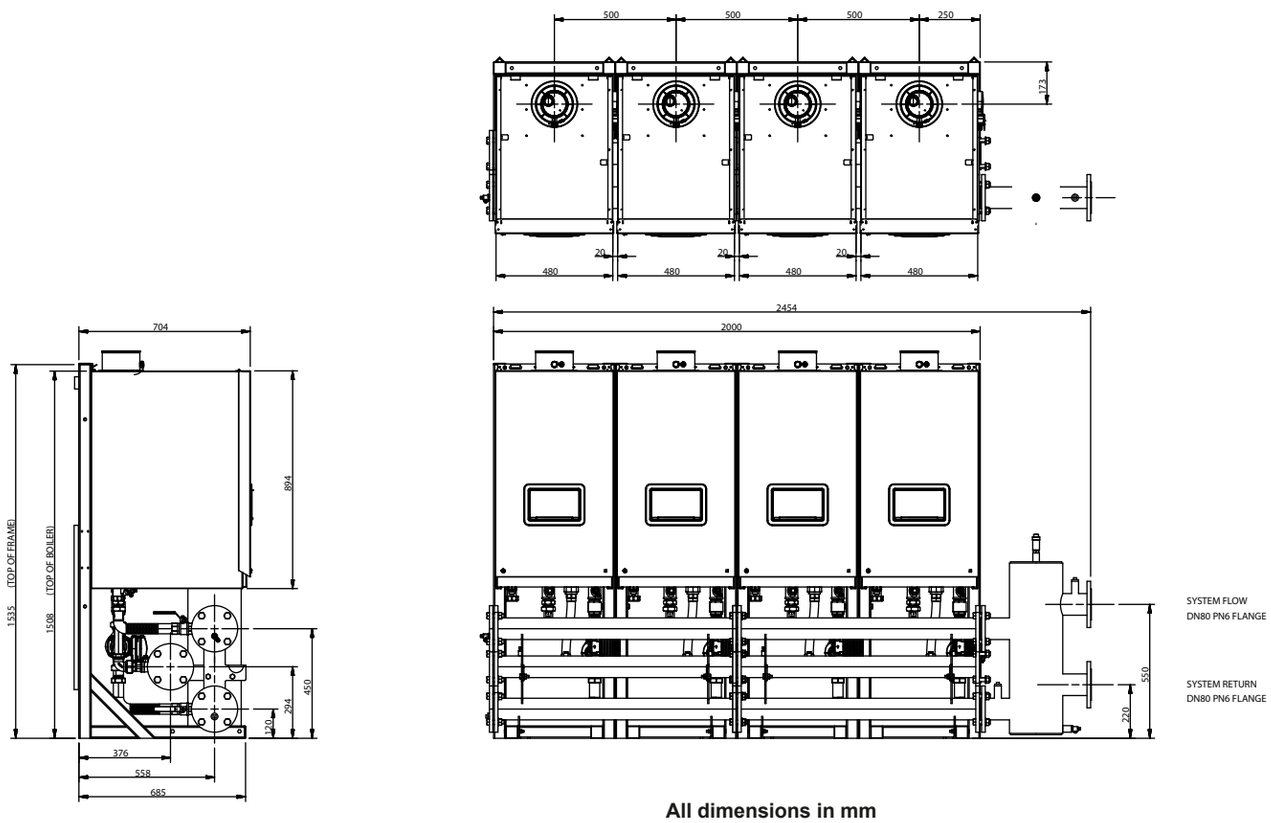

All dimensions in mm

6.2.9 INSTALLATION DRAWING WITH 4 – DN100 150 kW BOILERS (SIDE BY SIDE) (OPTIONAL LOW LOSS HEADER SHOWN FOR INFORMATION)

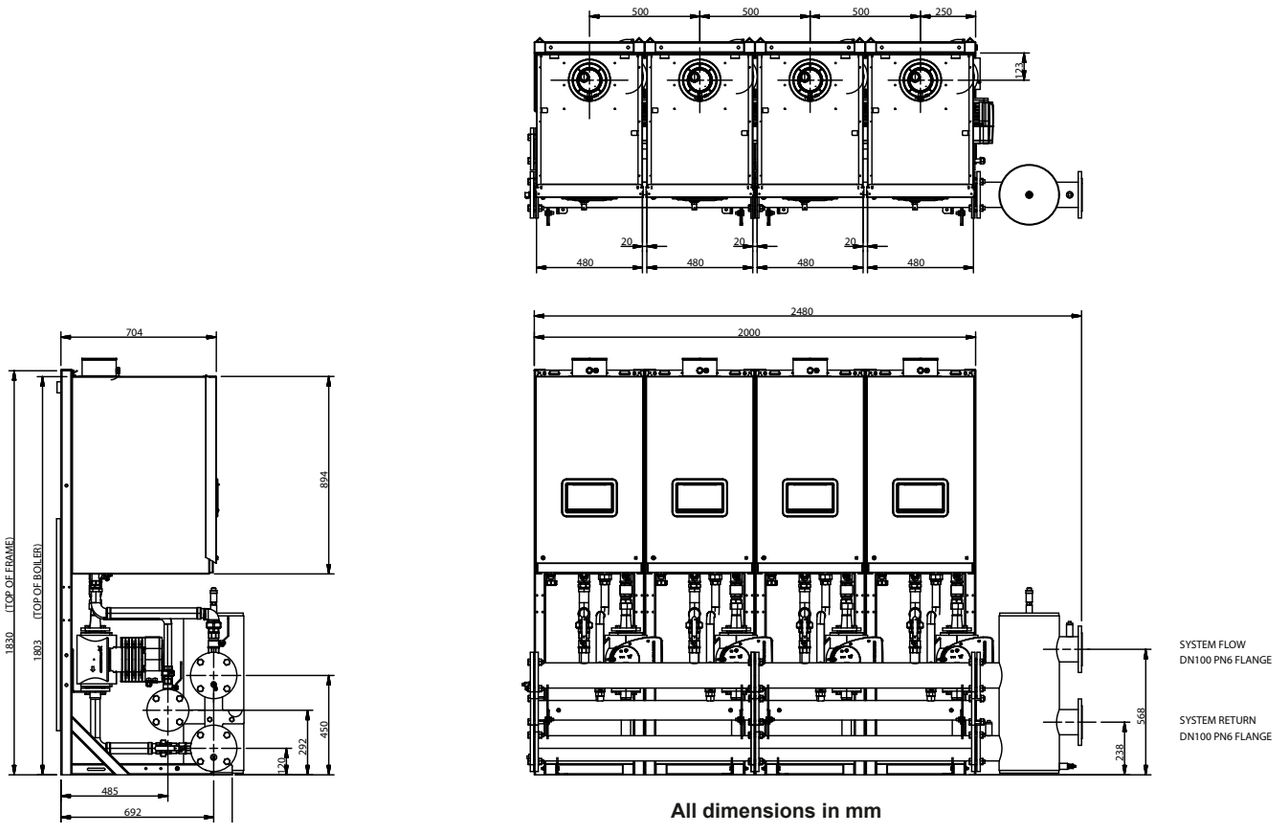

All dimensions in mm

6.2.10 INSTALLATION DRAWING WITH 5 – DN80 80-120 kW BOILERS (SIDE BY SIDE) (OPTIONAL LOW LOSS HEADER SHOWN FOR INFORMATION)

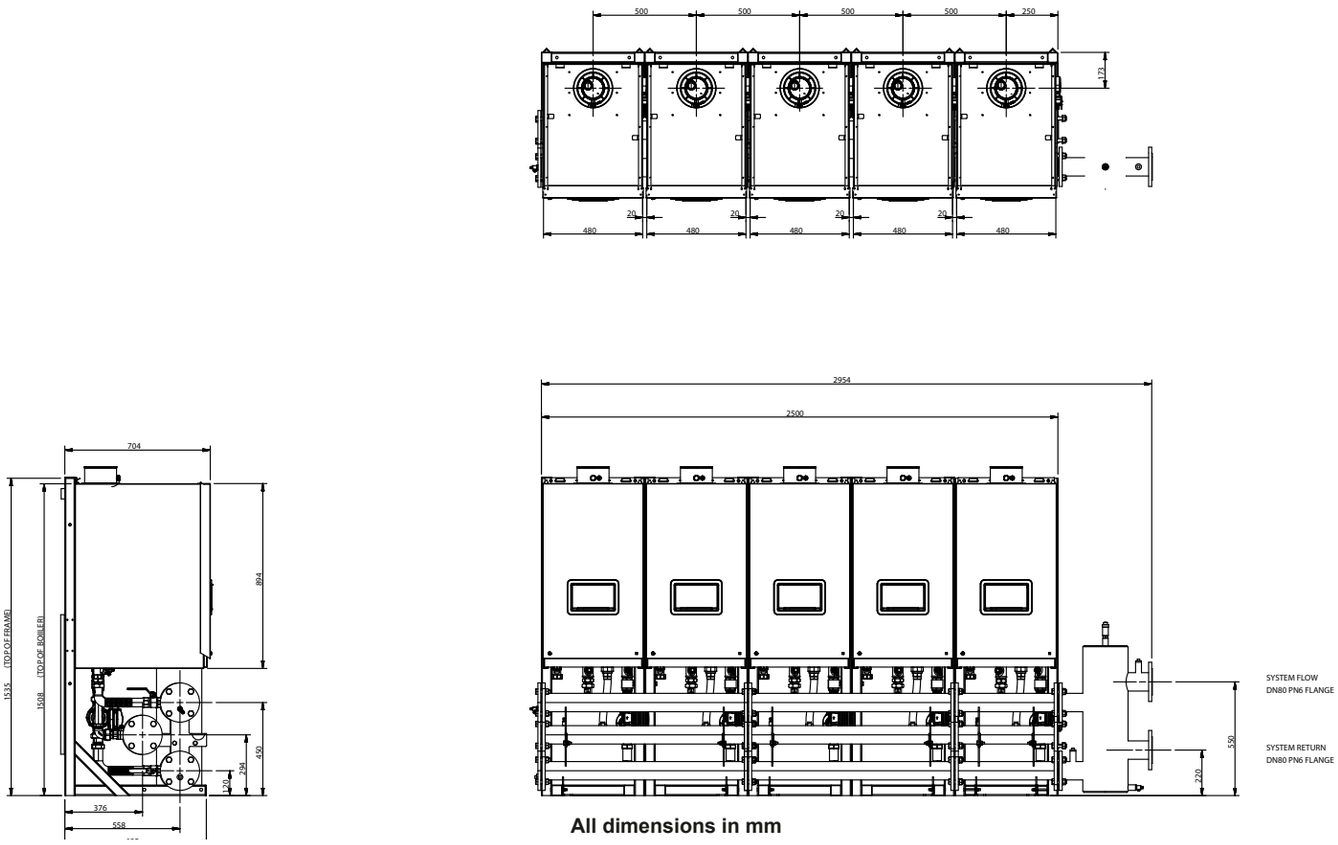

All dimensions in mm

6.2.11 INSTALLATION DRAWING WITH 5 – DN100 150 kW BOILERS (SIDE BY SIDE) (OPTIONAL LOW LOSS HEADER SHOWN FOR INFORMATION)

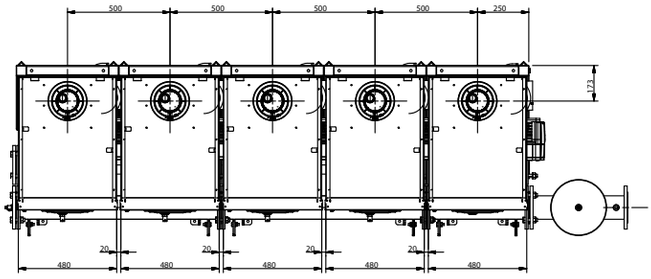

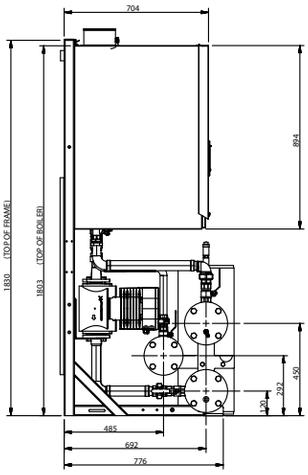

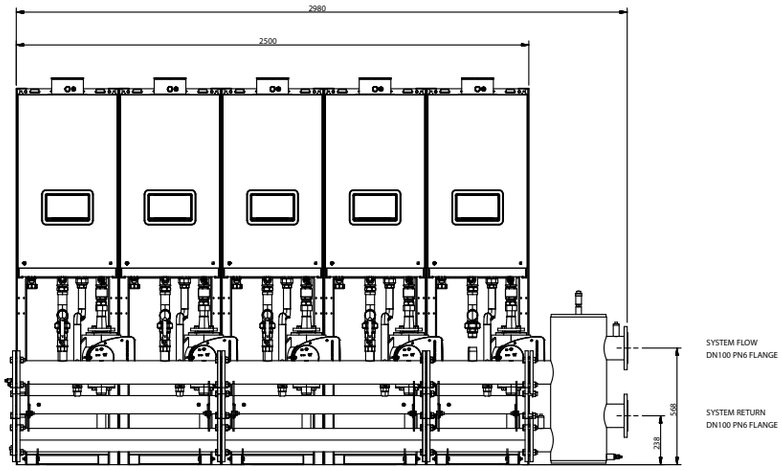

All dimensions in mm

6.2.12 INSTALLATION DRAWING WITH 6 - DN80 80-100 kW BOILERS (SIDE BY SIDE) (OPTIONAL LOW LOSS HEADER SHOWN FOR INFORMATION)

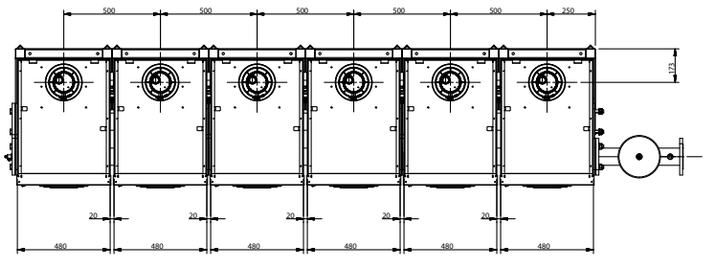

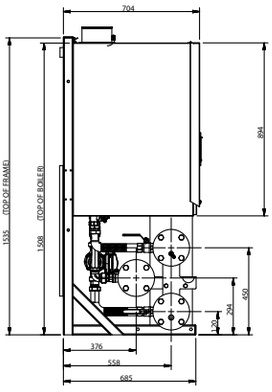

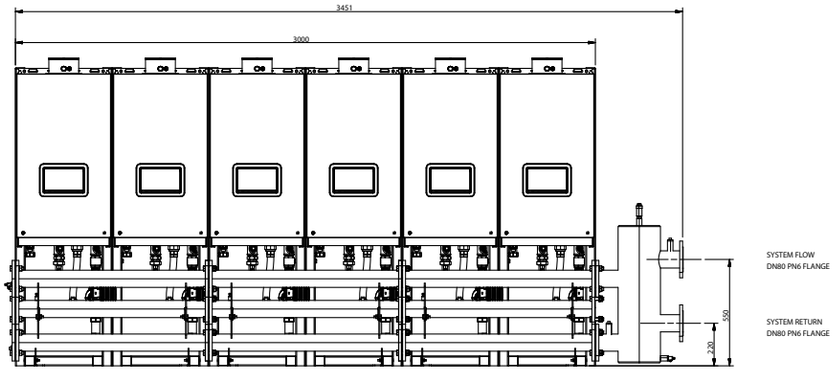

All dimensions in mm

6.2.13 INSTALLATION DRAWING WITH 6 – DN100 150 kW BOILERS (SIDE BY SIDE) (OPTIONAL LOW LOSS HEADER SHOWN FOR INFORMATION)

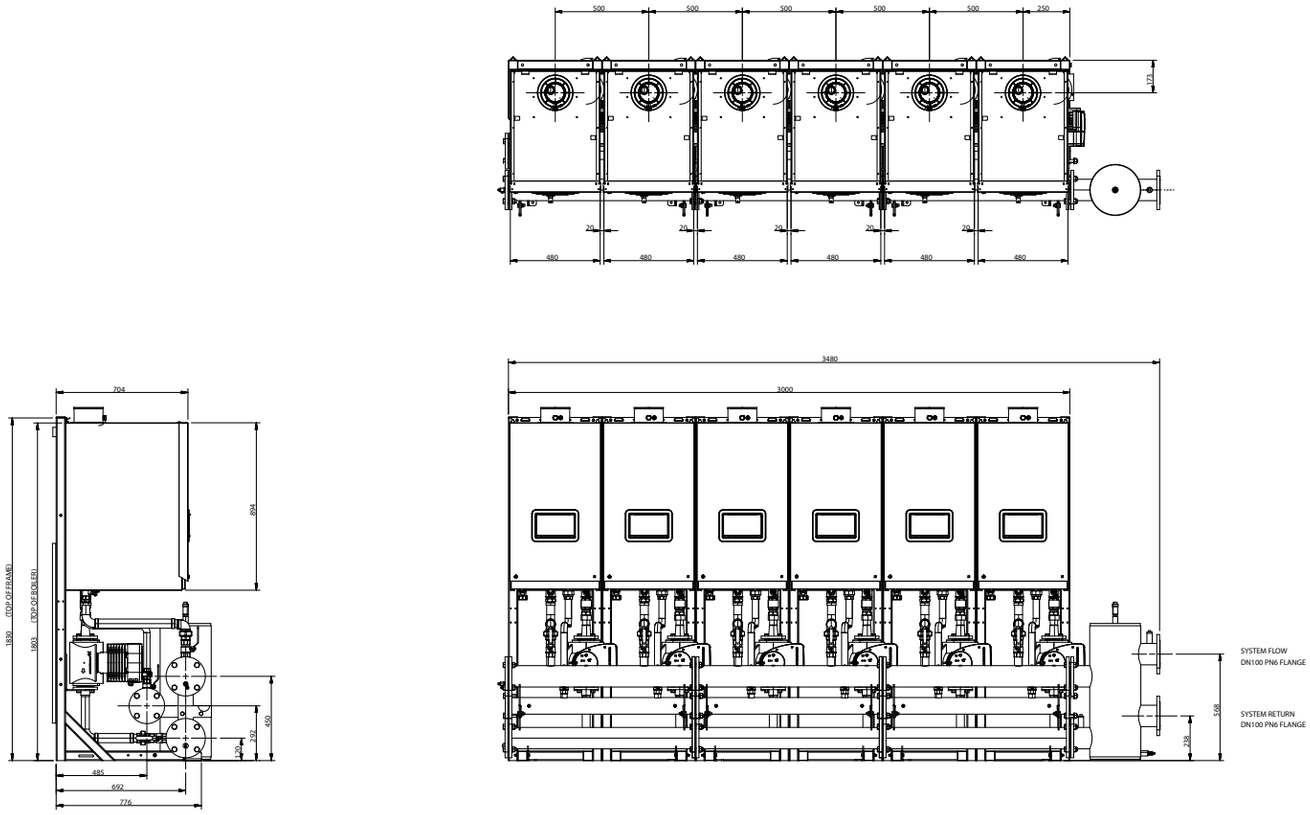

All dimensions in mm

7 ELECTRICAL CONNECTIONS & WIRING DIAGRAM

7.1 INSTALLER CONNECTIONS FOR MAGNA 1 BOILER PUMP

Note. Used with DN100 frame and header kits.

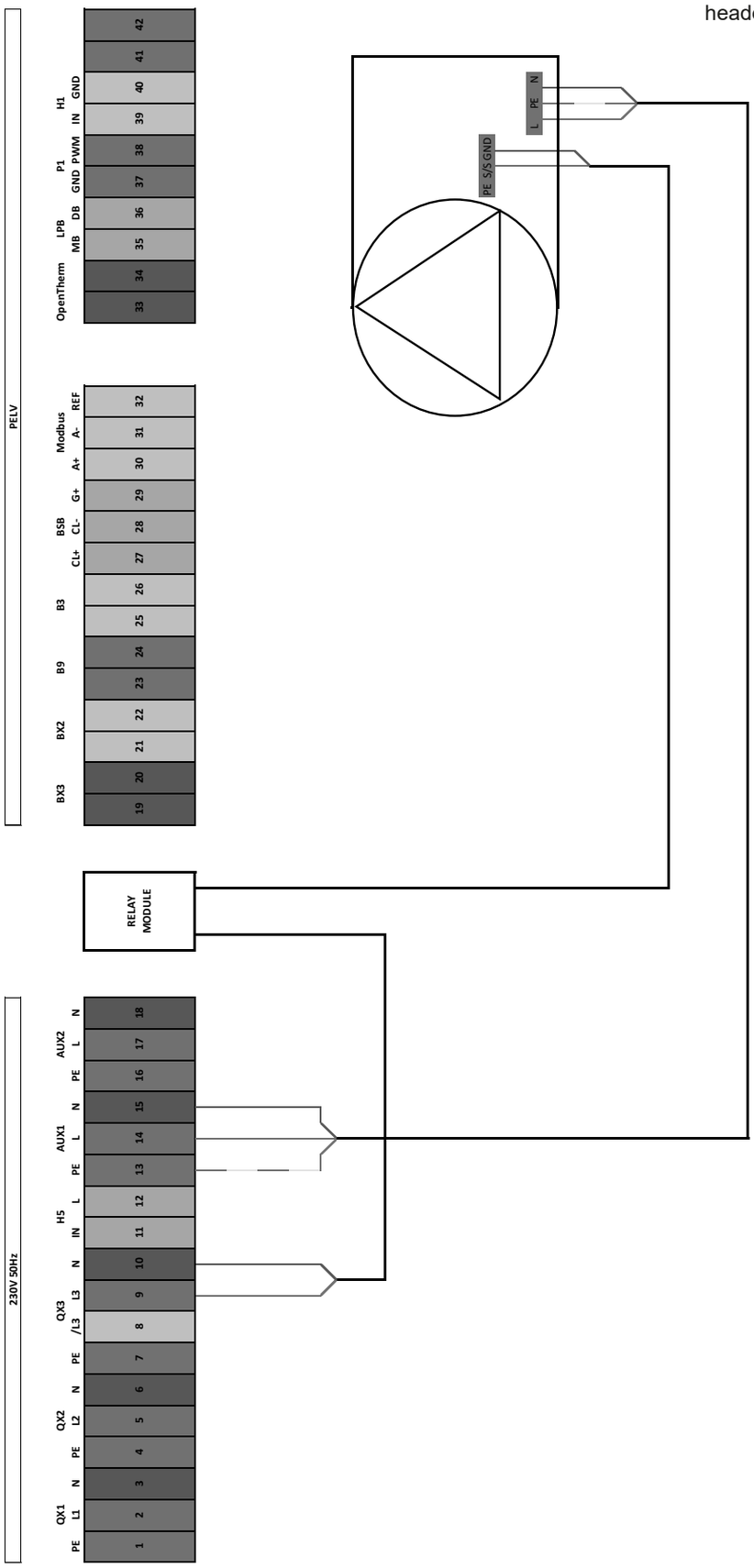

Refer to the Wiring Connection section in the boiler Installation Instructions for wiring details.

IMPORTANT: Ensure the boiler pumps are wired to the boiler in order to ensure the boiler pump overrun facility is provided.

7.2 INSTALLER CONNECTIONS FOR UPMXXL BOILER PUMP

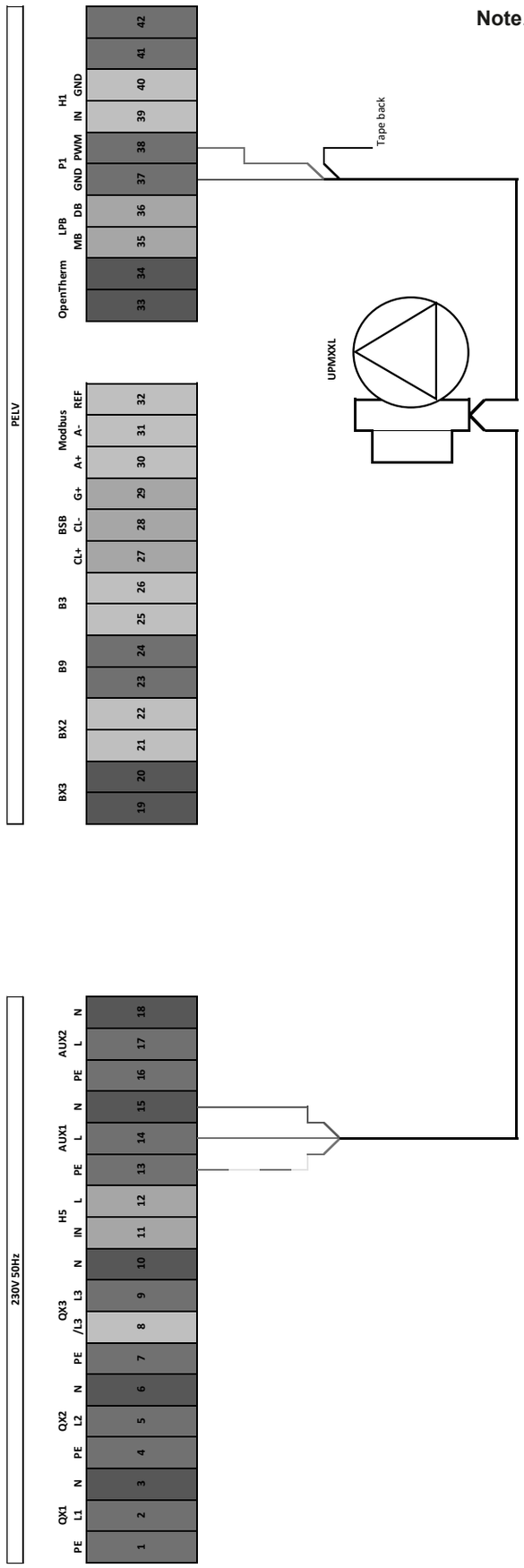

Note. Used on DN80 frame and header kits using low loss headers or plate heat exchangers.

Refer to the Wiring Connection section in the boiler Installation Instructions for wiring details.

IMPORTANT: Ensure the boiler pumps are wired to the boiler in order to ensure the boiler pump overrun facility is provided.

8 COMMISSIONING AND TESTING

1. Electrical and gas safety checks must be carried out on completion of installation as with individual boiler commissioning.
2. Pump setting - follow the instructions supplied with the pump, referring to the installation manual

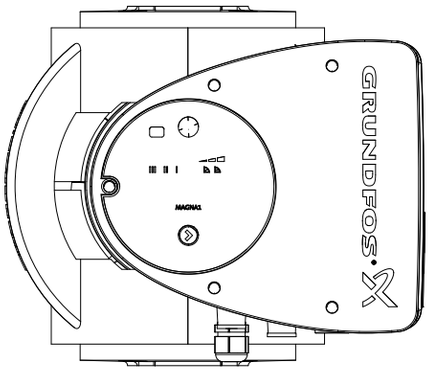

Magna 1

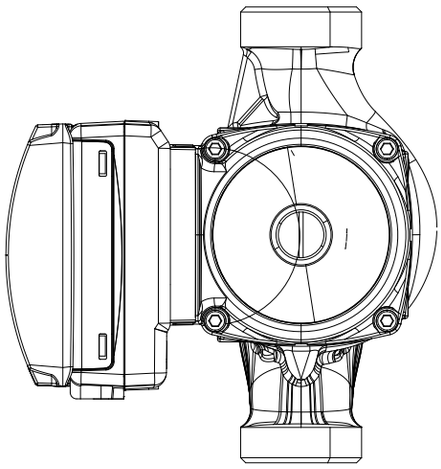

UPMXXL

ACV U.K. Limited
St. David's Business Park,
Dalgety Bay
Fife, Scotland
KY11 9PF

Tel: 0044 (0)1383 820100

www.acv.com/gb

ACV pursues a policy of continuing improvement in the design and performance of its products. The right is therefore reserved to vary specification without notice.