EVO S

Frame and Header Kit

40, 60, 70
40P, 60P, 70P

Instructions

When replacing any part on this appliance, use only spare parts that you can be assured conform to the safety and performance specification that we require. Do not use reconditioned or copy parts that have not been clearly authorised by ACV.

For the very latest copy of literature for specification and maintenance practices visit our website www/acv/com/gb where you can download the relevant information in PDF format.

06/2023
UIN 236070 A02

This kit is suitable for the following boilers:

Evo S 40, 60 & 70 using both Natural Gas and Propane

CONTENTS

1 Introduction.....3

2 General Description Of Systems.....4

3 System Components.....6

4 Installation Procedure.....8

5 Installation Drawings For Boiler Systems.....13

6 Electrical Connections & Wiring Diagram.....15

7 Commissioning and Testing.....16

IMPORTANT

THESE KITS CAN BE USED IN CONJUNCTION WITH LOW LOSS HEADERS & PLATE HEAT EXCHANGERS SUPPLIED AS PART OF THE OPTIONS RANGE

1 INTRODUCTION

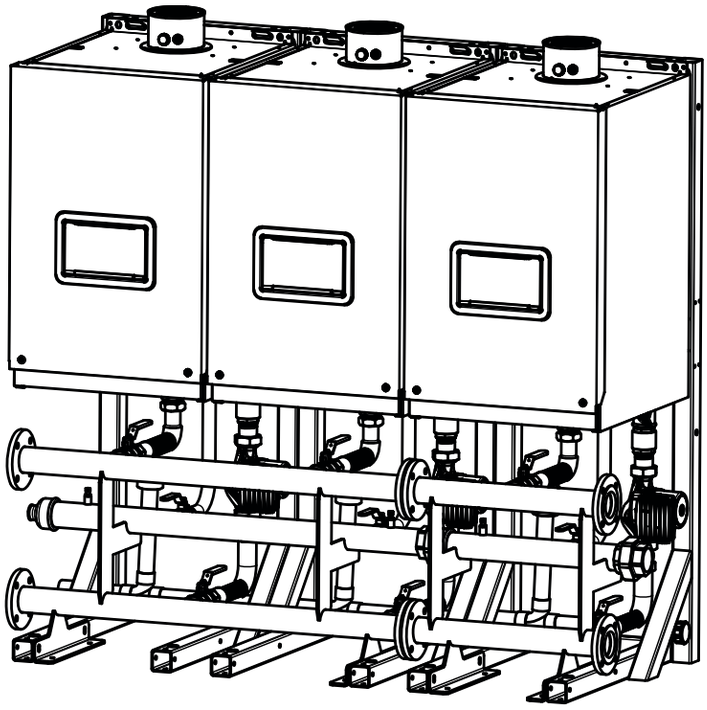

This technical data contains information for dimensioning and assembly of a cascade system kit for the Evo S ranges.

These 40-70kW/DN50 kits are supplied with gas and water header kits designed for use with a low loss header system.

They are based around a 1 wide and 2 wide system which can be combined to create up to a 4 wide cascade, along with all the necessary mounting holes to enable the fitting of the header kits and frame securing bolts.

This manual contains all the technical and dimensional data required to install these kits.

GENERAL DESCRIPTION OF FRAME AND HEADER KITS

These systems are adapted to incorporate the use of low loss headers, plate heat exchangers and optional sequencer control systems.

All these kits are supplied with the relevant number of necessary parts needed to connect these kits to the separately purchased appliances.

Boiler pumps are an accessory, and are selected for either low loss headers or plate heat exchangers.

All headers and pipe work should be insulated in accordance with the Non Domestic Building Services Compliance Guide. To ensure compliance with the maximum heat loss criteria, insulation thickness should be calculated according to BS EN ISO 12241 using standardised assumptions.

2 GENERAL DESCRIPTION OF SYSTEMS

A requirement to spread the total required heat output over several boilers can be accomodated by the use of the ACV multiple boiler frame and header kit options.

2.1 FRAME AND HEADER KIT DESIGN OPTIONS

1. These water headers and pumps (accessory) are designed for use with a low loss header system (option), or plate heat exchangers only (option).
2. Appliances are not provided with these kits and will be required to be purchased separately.

Table 1 Frame and Header Kit Design Options

Available Rig Configurations	Total Output Required (KW)	Number of boilers and Frames	Footprint Size WxDxH (mm)	Header Kit	
	Range			Size	Prod No.
Single Frame Configurations	40 - 70	1	500 x 685 x 1418	DN50	XB150005
Twin Frame Configurations	80 - 140	2	1000 x 685 x 1418	DN50	XB150006
Triple Frame Configurations	120 - 210	3	1500 x 685 x 1418	DN50	XB150007
Quad Frame Configurations	160 - 280	4	2000 x 685 x 1418	DN50	XB150008

* Max 5 x 60 kW only
** Max 6 x 40 kW only

Table 2 Available Boilers

kW	Product No.
Evo S 40	100008264200
Evo S 60	100008264300
Evo S 70	100008265900

Table 3 PHEX Kits Available

Product No.	Size	kW
XB150035	DN50	60 kW
XB150036	DN50	150 kW
XB150037	DN50	300 kW

Note. All boilers need to be sized in accordance to the total required heat load and the modulation capabilities of the appliances.

Table 4 Low Loss Header Accessories

DN50
XB150029

2.2 MULTIPLE BOILER INSTALLATIONS

When sizing multiple appliance installations, the minimum and maximum system heat load requirements need to be matched to the minimum and maximum appliance load capabilities.

These water header & pump kits are design to supply the optimum water flow around the appliance water circuit only and must be used in conjunction with a suitably sized low loss header (mixing header) or plate heat exchanger.

2.3 HYDRONIC ISOLATION: LOW LOSS HEADER & PLATE HEAT EXCHANGER

A low loss header allows flow separation within a hydronic system.

This allows two flow circuits to operate with their own flow and pressure drop environments whilst effectively transferring heat to its adjoined water circuit.

This enables the modern high resistant, high efficiency boilers to operate under their optimum conditions, while the main heating circuit operates to its own controlled optimum requirements.

2.4 OUTPUT CONTROL

All pumps controls should be designed to be wired to the appliance to allow a controlled pump over run.

If using an external pump control system the capability of a timed pump over run signal provided by the appliance must be maintained at all times.

2.5 GAS SUPPLY

The water header kits are supplied with a 2” gas header, associated components and hoses to make the connection to the appliance

Note. Test points are provided at each end of the 2” gas header. The test point nearest to the gas inlet is intended to be used as the appliance inlet pressure point.

2.6 ASSEMBLY

The frames must be located in a suitable place that affords a flat and level floor area of suitable load bearing capacity. Care must be taken when locating the frames that space is available for the servicing, installation and maintenance of the appliance and all of the associated connections and equipment. (See Appliance manuals)

When using multiple frames they must be bolted together and secure to the floor.

2.7 SAFE HANDLING

Installation may require 2 or more operatives to move it to its installation site, remove it from its packaging base and during movement into its installation location. Manoeuvring may include the use of a sack truck and involve lifting, pushing and pulling.

Caution should be exercised during these operations.

Operatives should be knowledgeable in handling techniques when performing these tasks and the following precautions should be considered:

- Grip the boiler at the base.
- Be physically capable.
- Use personal protective equipment as appropriate, e.g. gloves, safety footwear.

During all manoeuvres and handling actions, every attempt should be made to ensure the following unless unavoidable and/or the weight is light:

- Keep back straight.
- Avoid twisting at the waist.
- Avoid upper body/top heavy bending.
- Always grip with the palm of the hand.
- Use designated hand holds.
- Keep load as close to the body as possible.
- Always use assistance if required.

3 SYSTEM COMPONENTS

- 2” gas header with inlet test points.
- All the associated safety controls, pipes and fittings required to connect the water and gas header to the appliances are supplied.

3.1 MAIN WATER HEADERS

The main water header consists of un-insulated water flow and return pipes incorporating location and frame mounting brackets sized to cater for the range of products available for use with these kits.

3.2 GAS HEADER

The gas header consists of a 2” manifold tailored to fit the two, three or four unit versions available and is located in the cradle incorporated in the water header bracket structure.

All the pipe work and connections are provided to connect the header to the required appliance.

Test points are provided at each end of the 2” gas header. The test point nearest to the gas inlet is intended to be used as the appliance inlet pressure point.

3.3 BOILER PUMP

Pump kits and External pump controls **(sold separately)** are designed to provide the optimum flow around the appliance water circuit ensuring the maximum flow rates are contained within the design constrains of the appliance.

It is not recommended to fit additional pumps directly to the appliance circuit unless they have been designed to ensure the maximum permissible appliance flow rate is not exceeded.

3.4 BOILER CONNECTION KITS

These boiler connections are un-insulated and contain the following:

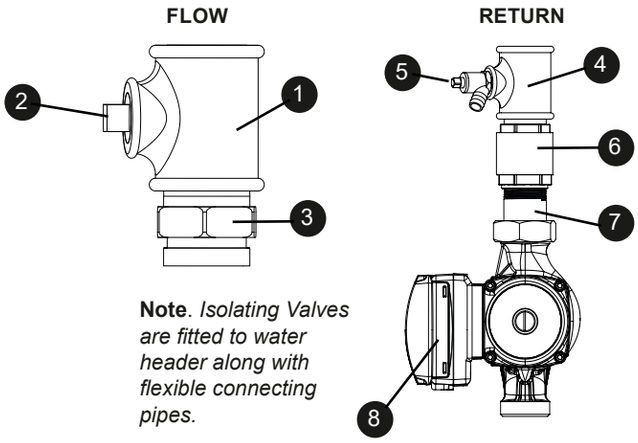

Note. *Isolating Valves are fitted to water header along with flexible connecting pipes.*

LEGEND
1. 1 ¼” x 1 ¼” x ¾” Tee
2. 3/4" Taper plug
3. 1 ¼” Male Parallel/Taper Hex Nipple
4. 1 ¼” x 1 ¼” x ½” Tee
5. Drain cock
6. Non return valve
7. Pump union
8. Pump inc. gaskets

Note. For boiler connection assembly, refer to Frame 4.4

3.5 FREE-STANDING FRAMES

The frames are designed to provide a compact floor mounted structure capable of having any of the range of appliances fitted to them.

Incorporating all the required mountings and assembly systems to bolt up to four frames together in a side by side format and mount the relevant water and gas heater kits.

Provision is also provided to allow the frames to be bolted to the floor.

Note. Floor mounting bolts are **NOT** provided.

3.6 INSTALLATION AREA AND DIMENSIONS

Care must be taken to ensure adequate access for boiler / cascade system installation and servicing.

A minimum of 450 mm clearance must be provided from the front of the installed boilers to facilitate boiler servicing.

Additional clearance must also be considered in the event of boiler replacement.

Consideration to connecting heating flow and return pipework, gas supply and condensate drainage must be given. Routing of the condensate drain must be made to allow a minimum fall of 1 in 20 away from the installed boilers, throughout its length.

Adequate room above the boilers must be provided to install and service the boiler flue system. Further information with respect to flue and condensate drain connection is provided in the installation and servicing instructions provided within the boilers packaging carton.

IMPORTANT POINTS

Before commencing installation:

- The frames must stand on a flat and level floor of suitable load bearing capacity.
- The header must be bolted to the frame before the hoses are connected to the boiler.

MOUNTING FRAME MUST BE SECURED

TO THE FLOOR WITH BOLTS

Allowances must be made for installation where features are in place that may affect the nominal installation conditions.

4 INSTALLATION PROCEDURE

4.1 SIDE BY SIDE FRAME KIT MOUNTING PROCEDURE

1. Place the frame kit sections in the required position and bolt them together at the top and bottom with the bolts, nuts and washers provided.

2. Drill and fit the required floor bolt's (not provided) through the hole provided in the front of the frame feet.
   (**Note.** This must be done before fitting water headers)

IMPORTANT: MOUNTING FRAME MUST BE SECURED TO THE FLOOR WITH BOLTS

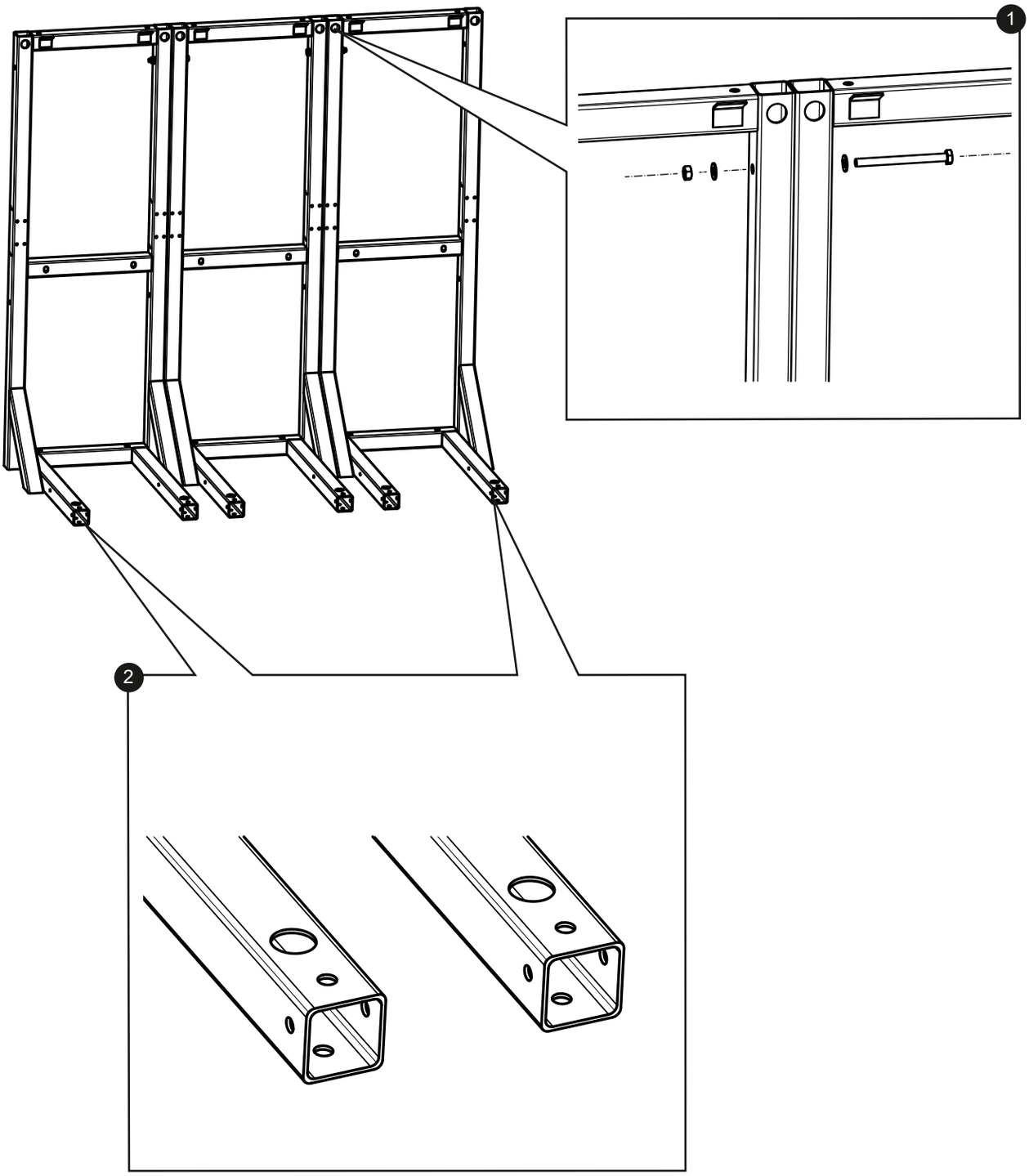

4.2 BOILER MOUNTING

1. As appropriate mount the boilers onto either the side by side frame kit.

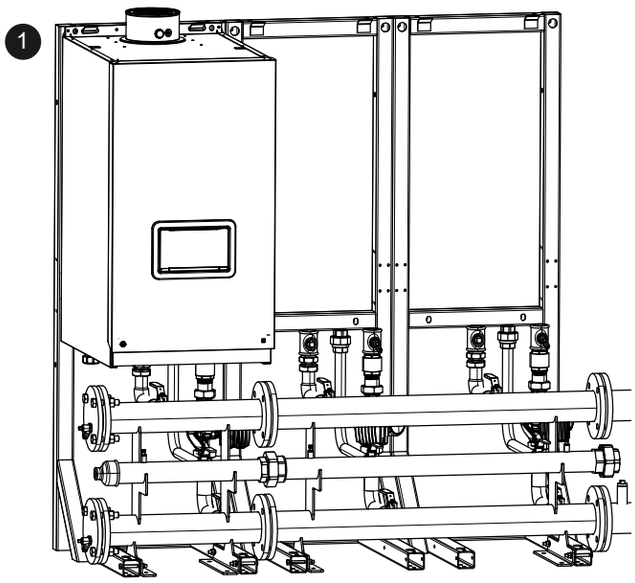

4.3 BOILER ASSEMBLY

1. Attach flow connection assembly to the boiler flow connection using suitable jointing compound.
2. Fit condensate trap and pipework (See appliance instruction, pipe runs must have 1:20 slope away from the appliance).
3. Fit one half of gas union to the boiler gas connection using Gas Safe approved jointing compound.
4. Attach flow connection assembly to the boiler return connection using suitable jointing compound, ensuring that the drain port location is in a suitable position.
5. Install the drain cock into the tee (if fitted to the return assembly before the drain will fall foul of the boiler casing).
6. Attach pump to the pump union on the return assembly using the sealing gaskets provided.

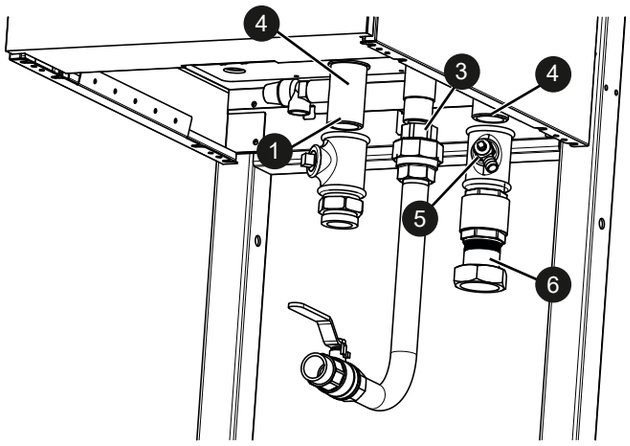

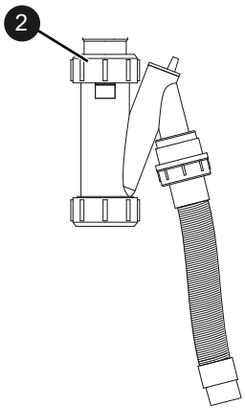

4.4 LOW LOSS HEADER ASSEMBLY (OPTIONAL ACCESSORY)

FITTING LOW LOSS HEADER AND BLANKING FLANGES

1. Fit the low loss header and blanking flanges in the chosen positions.

   Note. Low loss header can be located either LHS or RHS of the headers.

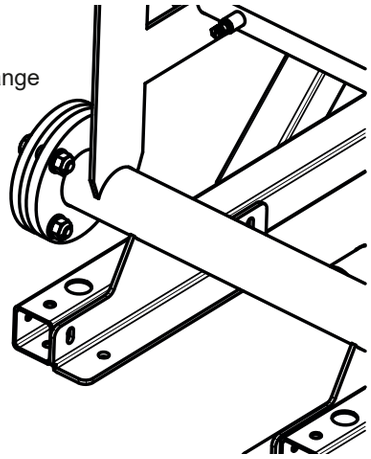

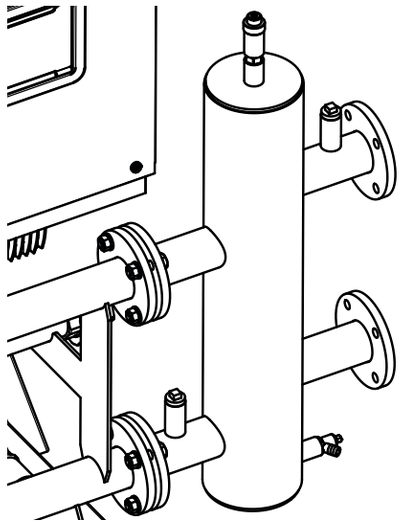

Note. For instructions relating to PHEX accessory, please see separate installation manual.

4.5 HEADER ASSEMBLY

1. Locate header into required position on the frame legs.
2. Align bolt holes and fit bolts (loosely).
3. Attach the return hose to the lower side of the pump using the sealing gasket provided.
4. Attach the flow hose to the flow connection assembly using the sealing gasket provided.
5. Check isolation valves are operational.
6. Fit water header blanking flanges using the gaskets and bolts provided.

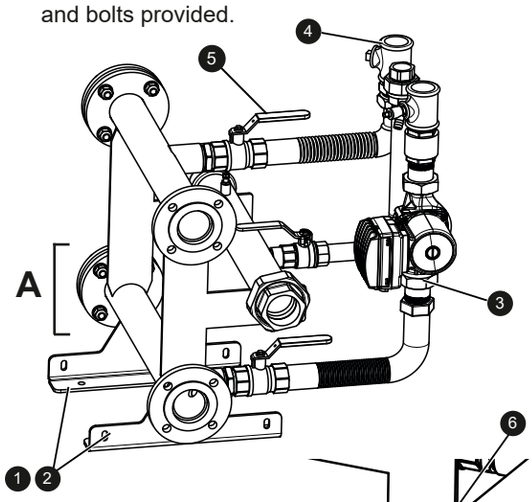

Note. Blanking plates supplied with 3/4" BSP hole for header drain off point.

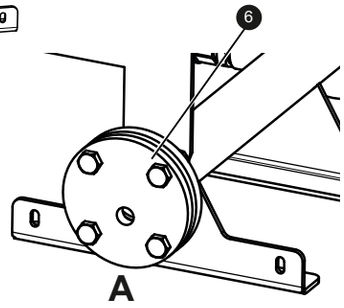

4.6 FITTING THE GAS HEADER

1. Fit the blanking cap to the required end of the gas header.
2. Place the gas header in the pre-cut cradle on the main header.
3. Fit the gas hose into the gas header valve using Gas Safe approved jointing compound.
4. Fit the gas hose union to the union attached to the boiler gas connection ensuring a gas tight seal.

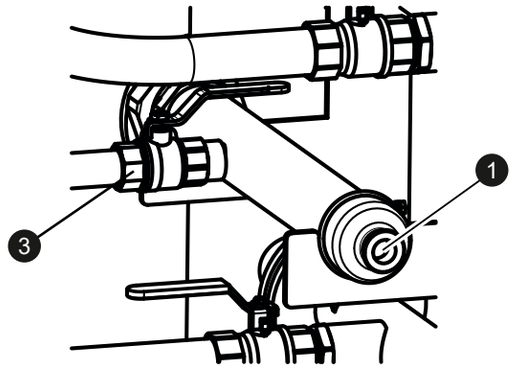

4.7 BOILER CONNECTION INSTRUCTIONS

1. Slide the header kit assembly between the frame legs but do not screw the header kit to the frame at this stage.

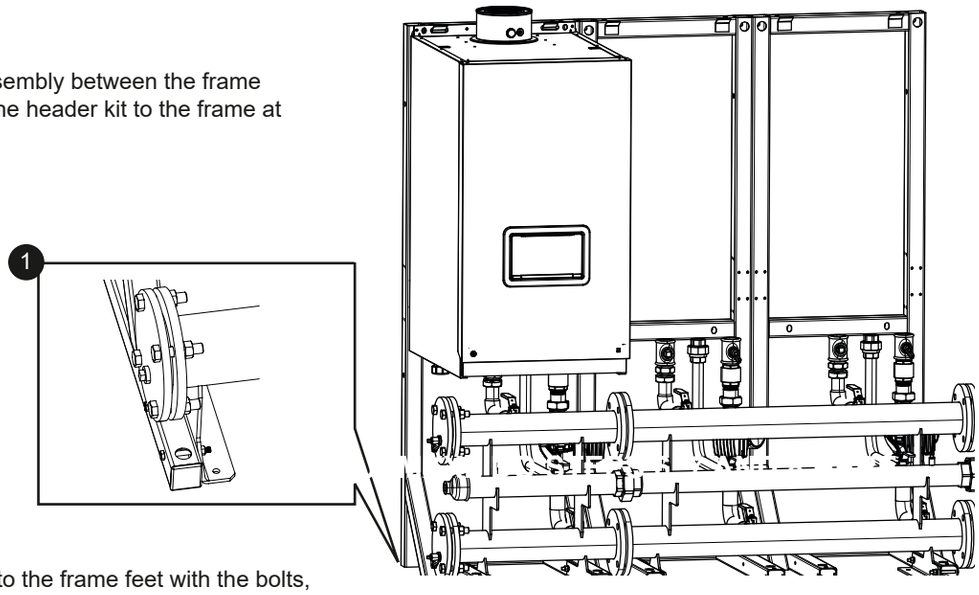

2. Screw the header feet to the frame feet with the bolts, nuts and washers provided – Do not tighten fully.
3. Connect the pump assembly to the boiler return connection using suitable jointing compound. Ensure orientation of the tee is appropriate for draining.
4. Connect the flow assembly to boiler flow connection using suitable jointing compound.
5. Fit drain valve into the ½" outlet of the tee on the return connection.

   Note. This must be fitted after the tee is fitted to the boiler.

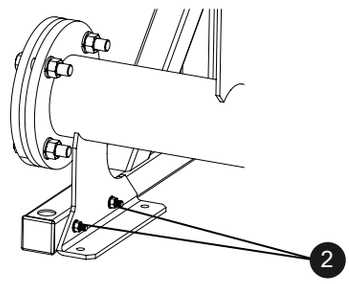

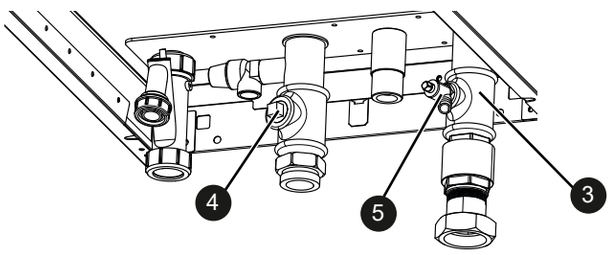

6. Fit the pump to the boiler return connection using the gaskets provided.
7. Fit the two flexible header connections to the boiler pump connection and the flow connection using the sealing washers provided.
8. Tighten header feet to frame feet bolts.

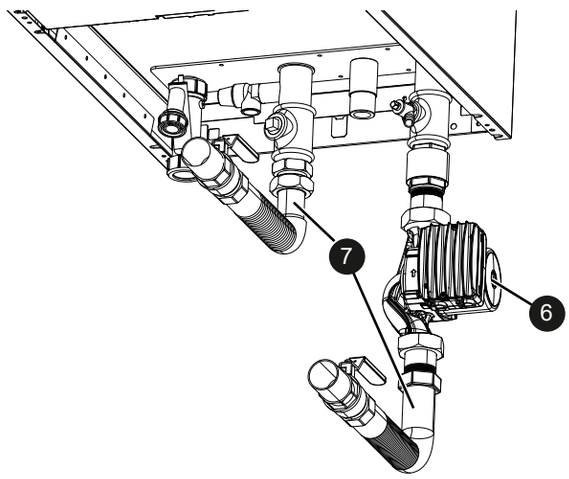

4.8 ASSEMBLE HEADER ONTO FRAME

1. Tighten the header bolts onto the frame.
2. Ensure that the test points on the gas header are accessible.

   Note. The test point nearest the inlet to the rigs is deemed as the appliance pressure test point for the appliances fitted).
3. Test all gas joints to ensure they are gas tight and safe.

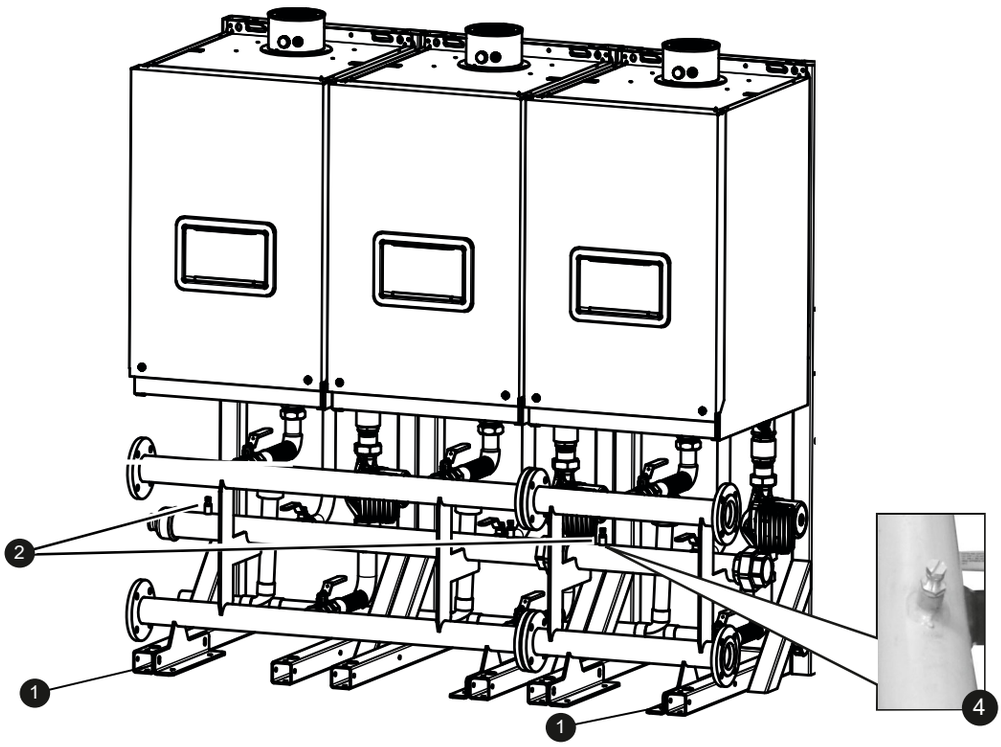

5 INSTALLATION DRAWINGS FOR BOILER SYSTEMS

5.1 GENERAL

The boiler and pipekit systems are available in side by side format:

- 1 to 4 boilers in a linear configuration, mounted on a frame.

These boiler and cascade systems are sized to provide a flow and return differential of 20º∆T.

5.2 INSTALLATION DRAWING WITH 1 DN50 40-70 kW BOILER

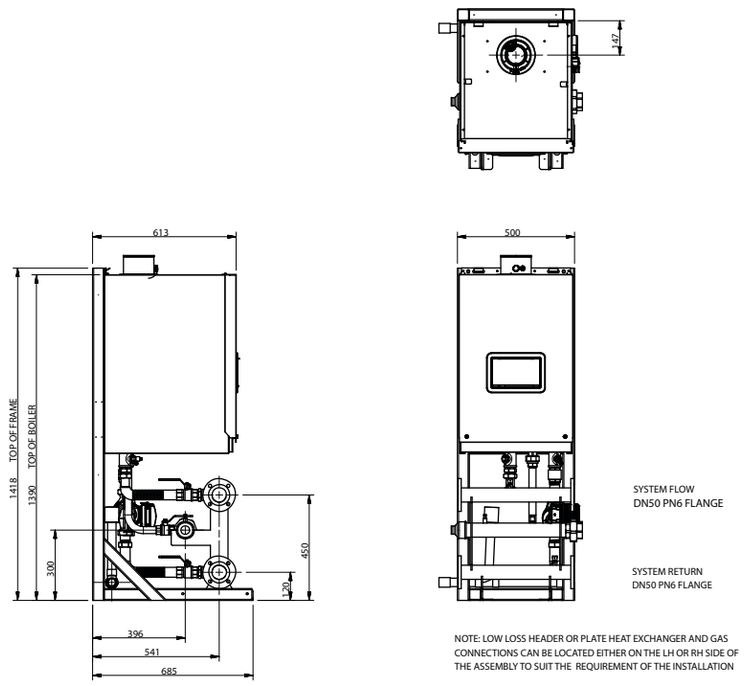

All dimensions in mm

5.3 INSTALLATION DRAWING WITH 2 DN50 40-70 kW BOILERS

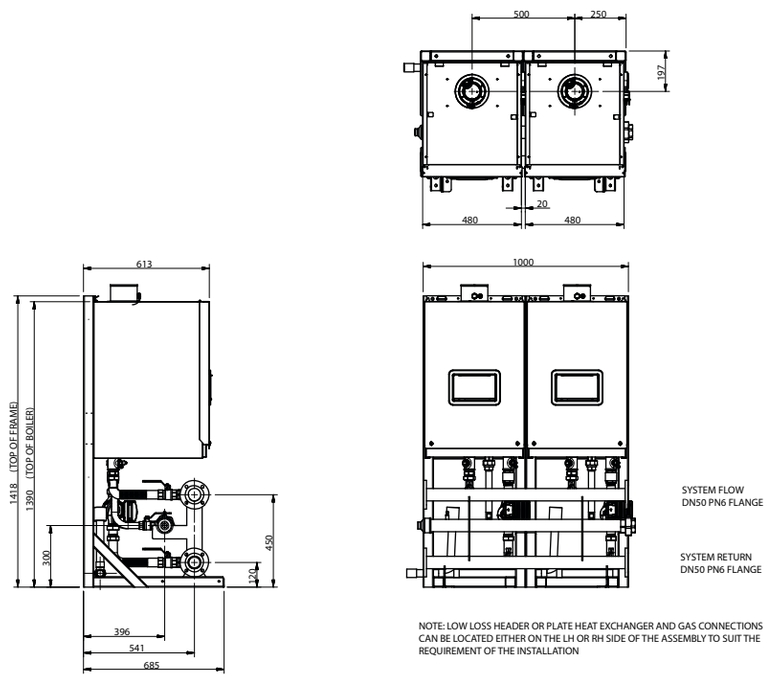

All dimensions in mm

5.4 INSTALLATION DRAWING WITH 3 DN50 40-70 kW BOILERS

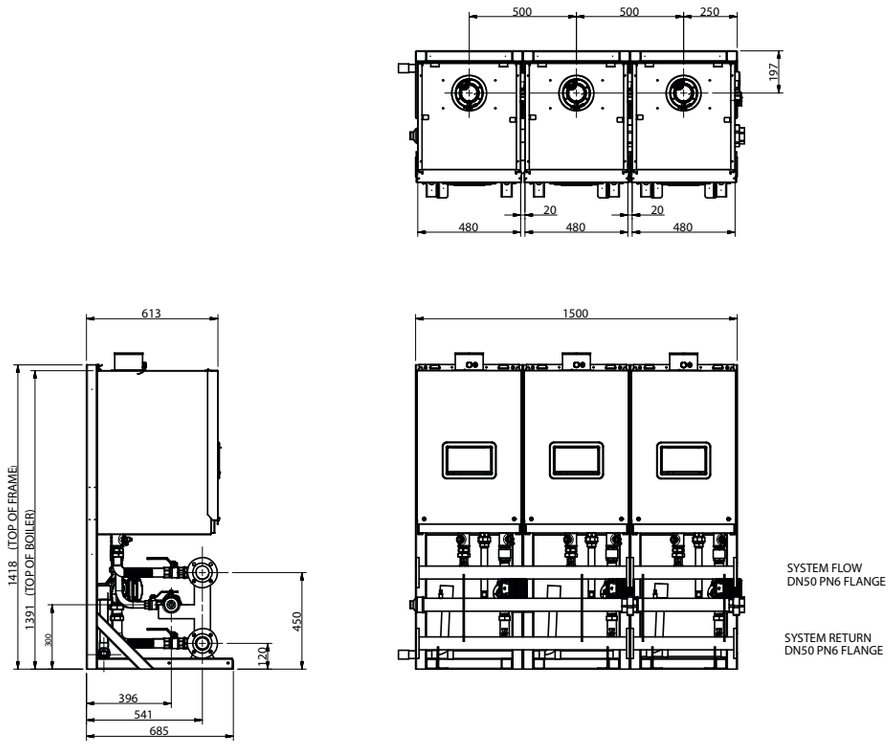

NOTE: LOW LOSS HEADER OR PLATE HEAT EXCHANGER AND GAS CONNECTIONS CAN BE LOCATED EITHER ON THE LH OR RH SIDE OF THE ASSEMBLY TO SUIT THE REQUIREMENT OF THE INSTALLATION

All dimensions in mm

5.5 INSTALLATION DRAWING WITH 4 DN50 40-70 kW BOILERS

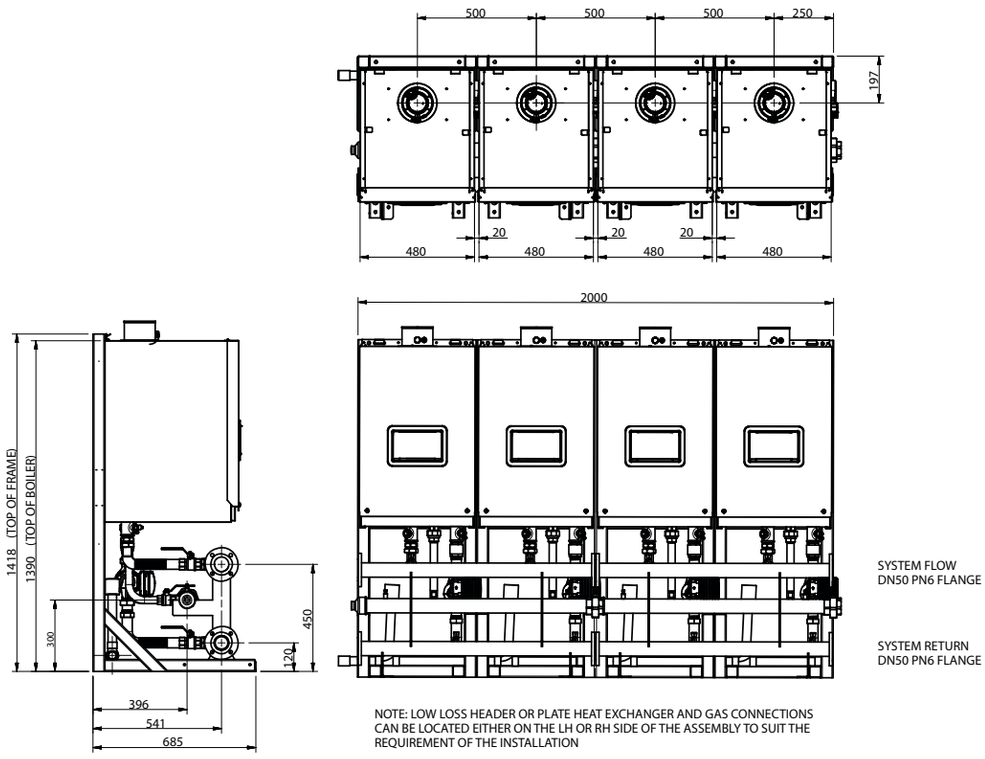

NOTE: LOW LOSS HEADER OR PLATE HEAT EXCHANGER AND GAS CONNECTIONS CAN BE LOCATED EITHER ON THE LH OR RH SIDE OF THE ASSEMBLY TO SUIT THE REQUIREMENT OF THE INSTALLATION

All dimensions in mm

6 ELECTRICAL CONNECTIONS & WIRING DIAGRAM

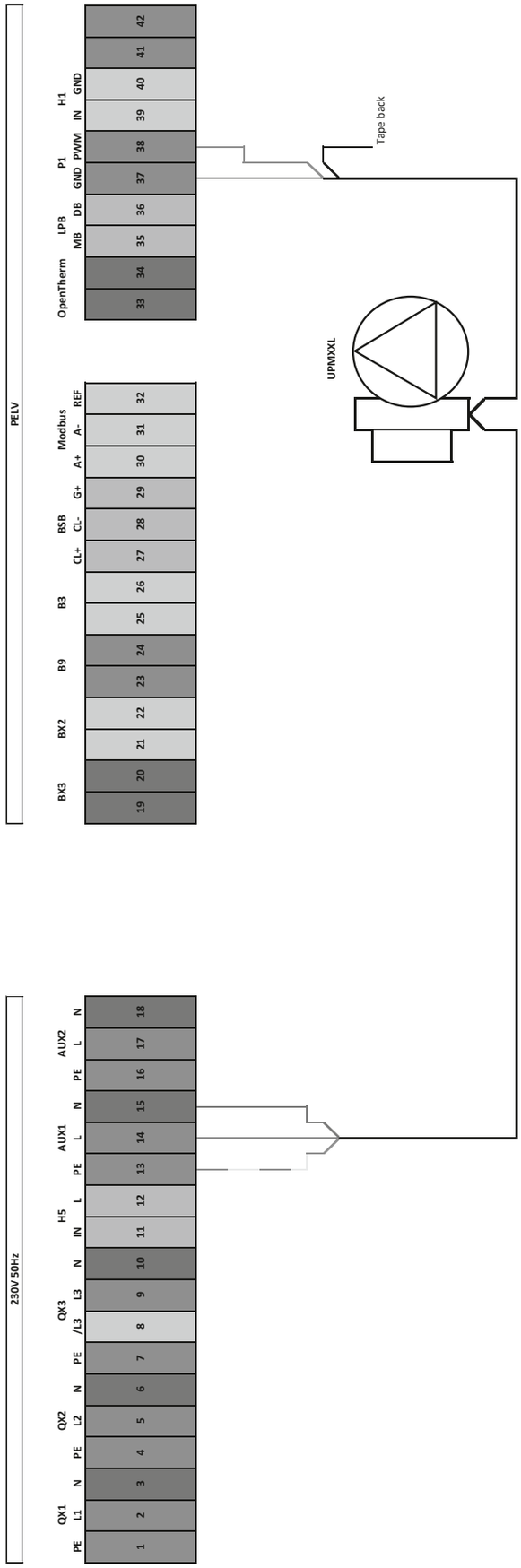

Refer to the Wiring Connection section in the boiler Installation Instructions for wiring details.

IMPORTANT: Ensure the boiler pumps are wired to the boiler in order to ensure the boiler pump overrun facility is provided.

7 COMMISSIONING AND TESTING

1. Electrical and gas safety checks must be carried out on completion of installation as with individual boiler commissioning.
2. Pump setting - follow the instructions supplied with the pump, referring to the installation manual.

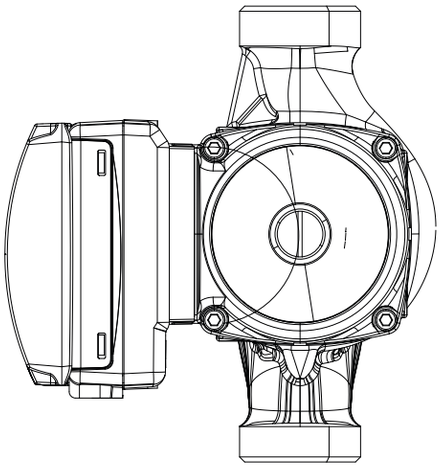

UPMXXL

NOTES

NOTES

NOTES

ACV U.K. Limited
St. David's Business Park,
Dalgety Bay
Fife, Scotland
KY11 9PF

Tel: 0044 (0)1383 820100

www.acv.com/gb

ACV pursues a policy of continuing improvement in the design and performance of its products. The right is therefore reserved to vary specification without notice.