EVO S

Plate Heat Exchanger Kits

40-150 kW Natural Gas and 40-120kW Propane

Instructions

When replacing any part on this appliance, use only spare parts that you can be assured conform to the safety and performance specification that we require. Do not use reconditioned or copy parts that have not been clearly authorised by ACV.

For the very latest copy of literature for specification and maintenance practices visit our website www/acv/com/gb where you can download the relevant information in PDF format.

06/2023
UIN 236072 A02

CONTENTS

1 Introduction.....3

2 General Description of Cascade Systems 3

3 Plate Heat Exchanger Kit (Optional Accessory).....5

4 Installation Drawings for Multiple Boiler Systems.....6

IMPORTANT

THESE INSTRUCTIONS MUST BE USED IN CONJUNCTION WITH THE FRAME & HEADER KIT INSTRUCTIONS SUPPLIED WITH THE EVO S HEADERS

1 INTRODUCTION

This technical data contains information for dimensioning & assembly of a cascade system kit for the Evo S.

GENERAL DESCRIPTION OF FRAME & HEADER KITS

A requirement to spread the total required heat output over several boilers can be accommodated by the use of the Evo S multiple boiler frame & header kit options.

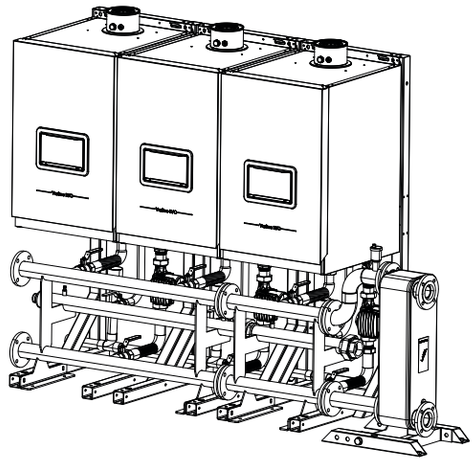

2 GENERAL DESCRIPTION OF CASCADE SYSTEMS

2.1 FRAME AND HEADER KIT DESIGN OPTIONS

Note: All boilers need to be sized in accordance to the total required heat load and the modulation capabilities of the appliances.

Table 1 - Cascade Options

		Max Boilers in Cascade @ stated Header Size		PHEX Options
Boiler Type	**Boiler Water Header Size**	**No**	**Max Output (kW)**	
Evo S 40	DN50	4	160	60 kW, 150 kW, 300 kW
Evo S 60	DN50	4	240	
Evo S 70	DN50	4	280	150 kW, 300 kW
Evo S 80	DN80	6	480	150 kW, 300 kW, 450 kW, 600 kW
Evo S 100	DN80	6	600	
Evo S 120	DN80	5	600	
Evo S 150	DN100	6	900	300 kW, 450 kW, 600 kW, 750 kW, 900 kW

Table 2 - PHEX Kit Outlet Connection Size

PHE Kits (kW)	Outlet Connection Size
60	DN25 FLANGE
150	
300	DN50 FLANGE
450	
600	
750	DN80 FLANGE
900	

Note: The total system output must not exceed the Plate Heat Exchanger kW Rating.

One Plate Heat Exchanger Kit required per cascade.

Refer to the Boiler Installation, Commissioning and Servicing Instructions, and the Navistem B3100 manual for cascade options.

continued . . . . .

2.3 SYSTEM SEPARATION: LOW LOSS HEADER & PLATE HEAT EXCHANGER

A low loss header or plate heat exchanger allows flow separation within a heating system.

This allows two flow circuits to operate with their own flow and pressure drop environments whilst effectively transferring heat to its adjoined water circuit.

This enables the modern high resistant, high efficiency boilers to operate under their optimum conditions, while the main heating circuit operates to its own controlled optimum requirements. Hamworthy's brazed plate heat exchangers ensure optimum heat transfer efficiency and low resistance within a compact footprint. The heat exchanger allows hydraulic segregation between the boiler primary and secondary heating circuits. Used in conjunction with ACV's 40-70 kW and 80-150 kW frame and header kits covering duties from 60kW to 900kW.

The design is based on standard components and a modular brazed concept. Each unit is manufactured to the highest standard and part of the AHRI certified program that ensures thermal performance in accordance with the product specifications.

Benefits

- Compact design
- No gaskets
- Easy install with ACV's Frame and Header Kits
- Low maintenance/ self-cleaning
- All units are pressure tested

2.4 ASSEMBLY

The frames must be located in a suitable place that affords a flat and level floor-area of suitable load bearing capacity. Care must be taken when locating the frames that space is available for the servicing, installation and maintenance of the appliance and all of the associated connections and equipment. (See appliance manuals)

When using multiple frames they must be bolted together and where necessary secured to the floor.

2.5 SAFE HANDLING

Installation may require 2 or more operatives to move it to its installation site, remove it from its packaging base and during movement into its installation location. Manoeuvring may include the use of a sack truck and involve lifting, pushing and pulling.

Caution should be exercised during these operations.

Operatives should be knowledgeable in handling techniques when performing these tasks and the following precautions should be considered:

- Be physically capable
- Use personal protective equipment as appropriate, e.g. gloves, safety footwear

During all manoeuvres and handling actions, every attempt should be made to ensure the following unless unavoidable and/or the weight is light.

- Keep back straight
- Avoid twisting at the waist
- Avoid upper body/top heavy bending
- Always grip with the palm of the hand
- Use designated hand holds
- Keep load as close to the body as possible
- Always use assistance if required

2.6 KIT CONTENTS

PHEX kit comprises brazed heat exchanger, pipe spools, flanges and fixings to enable direct assembly on to frame and header kit.

3 PLATE HEAT EXCHANGER KIT (OPTIONAL ACCESSORY)

3.1 PLATE HEAT EXCHANGER

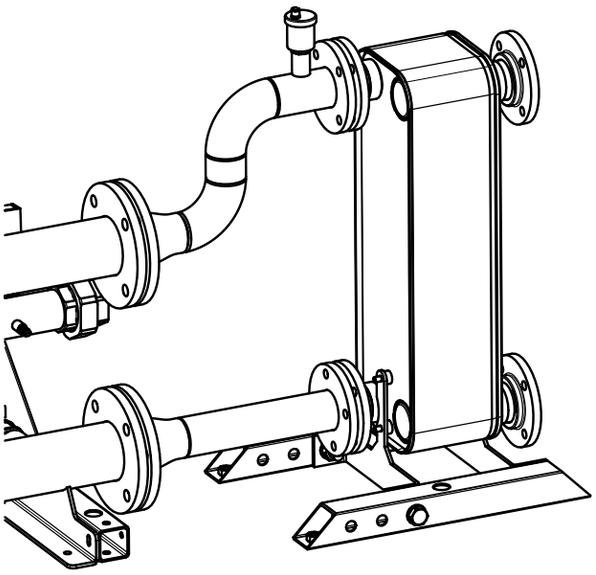

3.2 FITTING PLATE HEAT EXCHANGER AND BLANKING FLANGES

1. Fit the Plate Heat Exchanger and blanking flanges in the chosen positions.

   Note: *Plate Heat Exchanger can be located either LHS or RHS of the headers.*

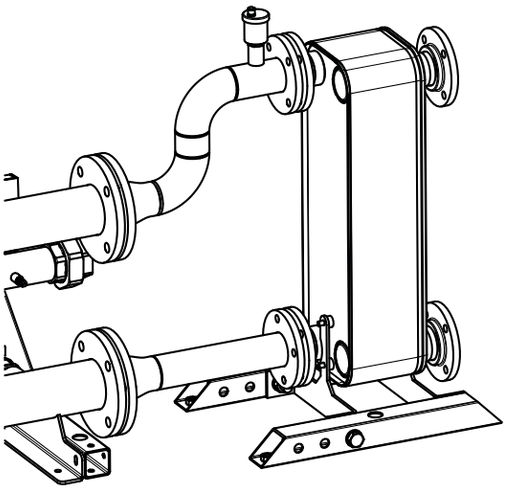

Plate Heat Exchanger

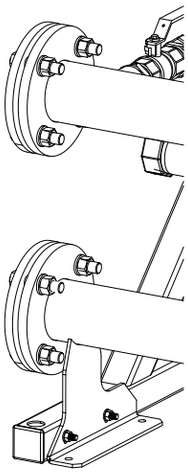

Blanking Flange

4 INSTALLATION DRAWINGS FOR MULTIPLE BOILER SYSTEMS

4.1 INSTALLATION DRAWING OF 1 BOILER ON DN50 FRAME & HEADER KIT WITH 60 kW PLATE HEAT EXCHANGER

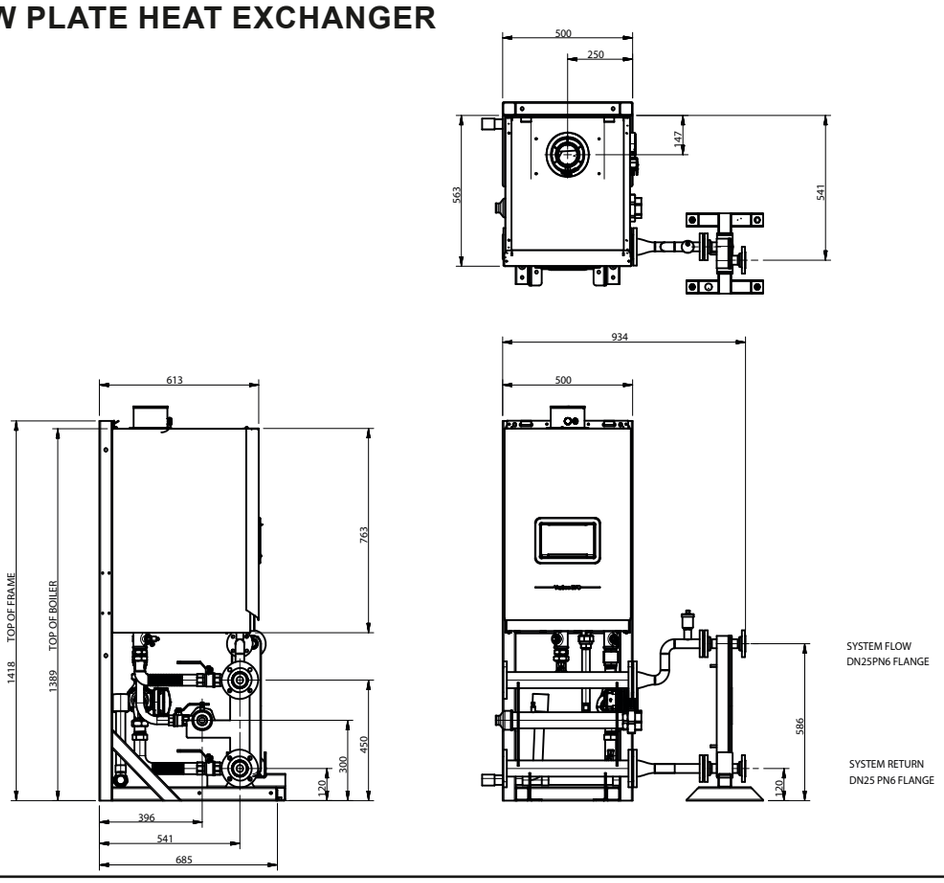

4.2 INSTALLATION DRAWING OF 2 BOILER ON DN50 FRAME & HEADER KIT WITH 150 kW PLATE HEAT EXCHANGER

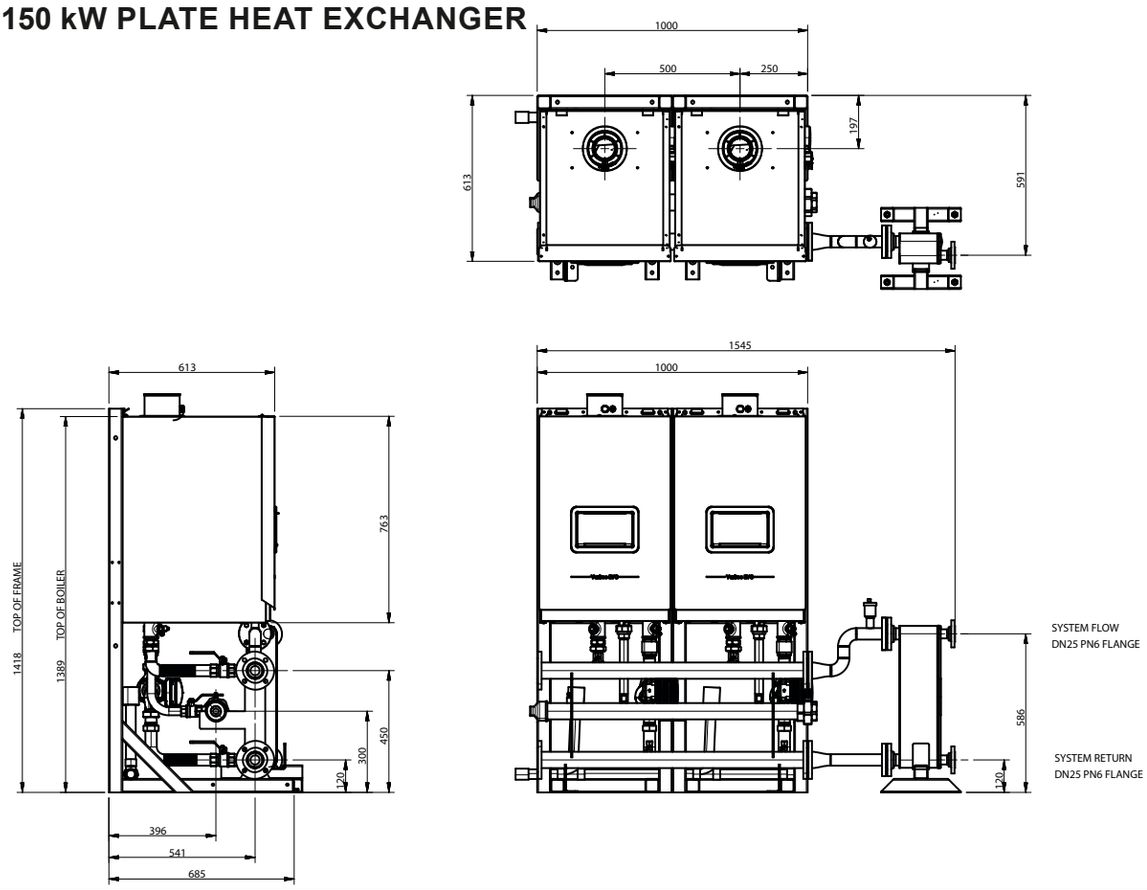

4.3 INSTALLATION DRAWING OF 3 BOILERS ON DN50 FRAME & HEADER KIT WITH 150 kW PLATE HEAT EXCHANGER

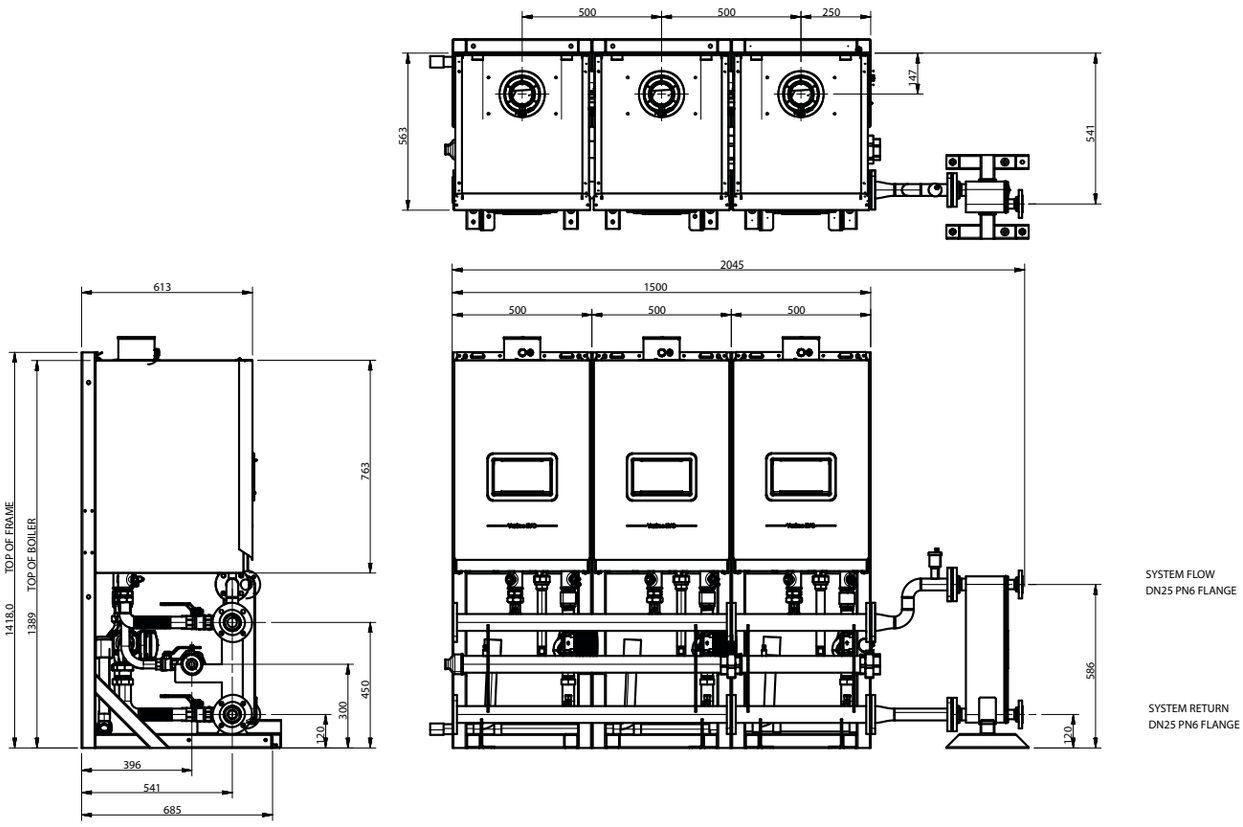

4.4 INSTALLATION DRAWING OF 3 BOILERS ON DN50 FRAME & HEADER KIT WITH 300 kW PLATE HEAT EXCHANGER

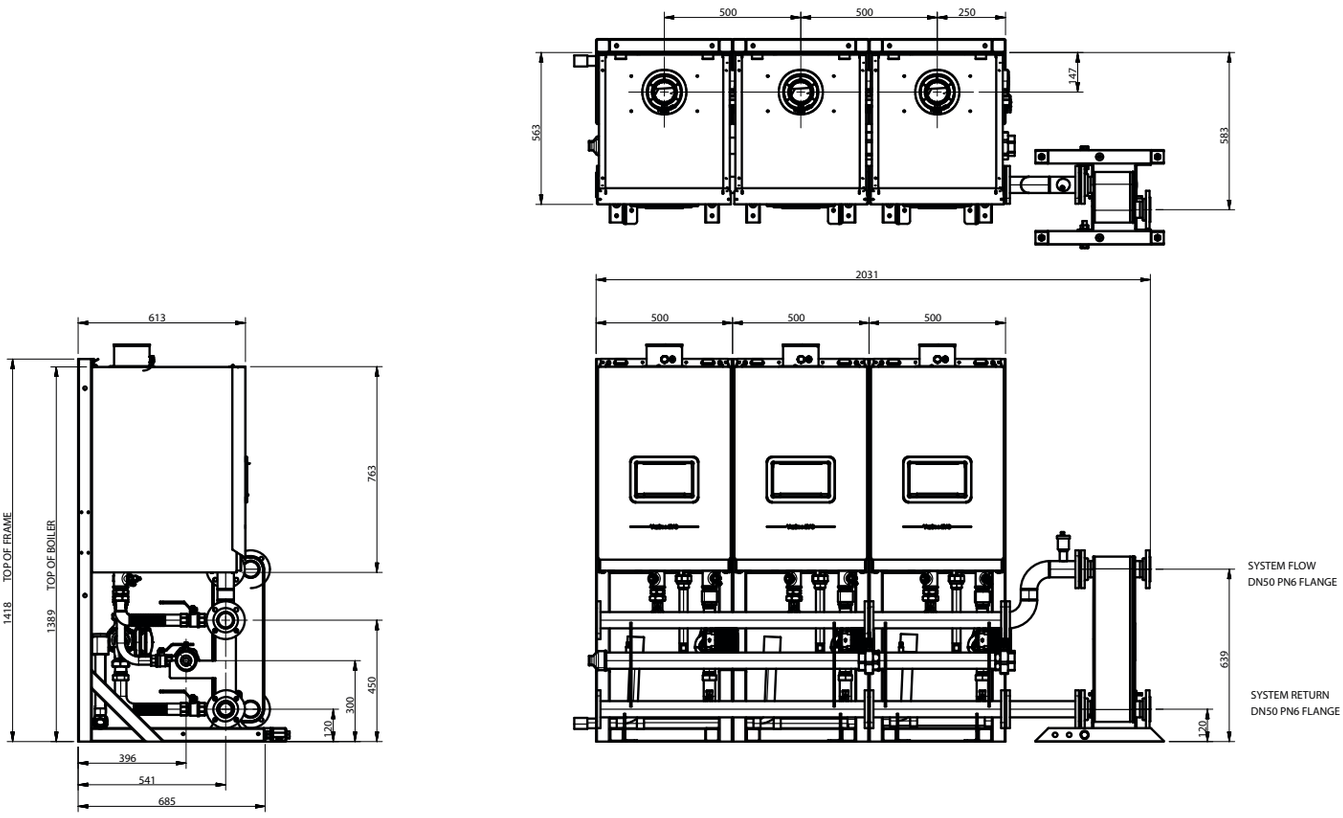

4.5 INSTALLATION DRAWING OF 4 BOILERS ON DN50 FRAME & HEADER KIT WITH 300 kW PLATE HEAT EXCHANGER

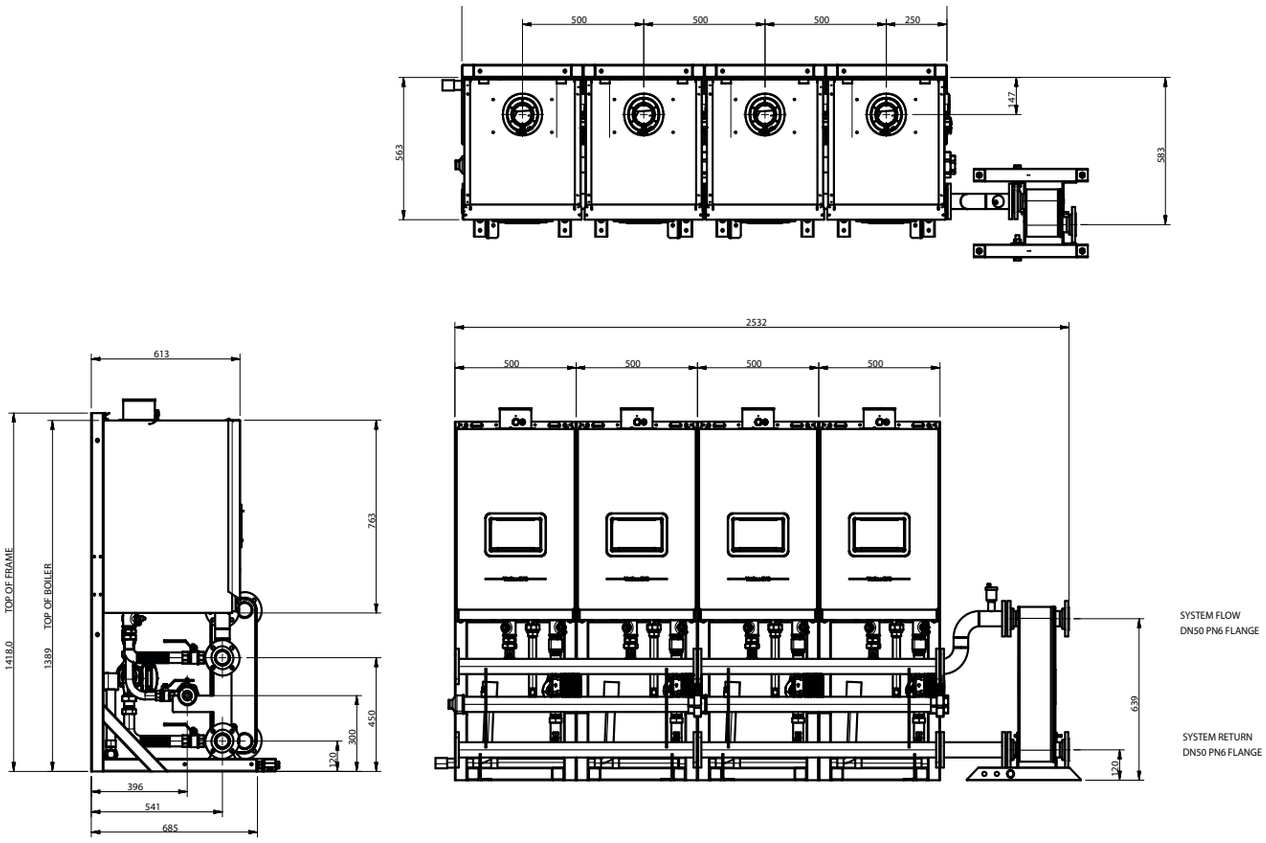

4.6 INSTALLATION DRAWING OF 1 BOILER ON DN80 FRAME & HEADER KIT WITH 150 kW PLATE HEAT EXCHANGER

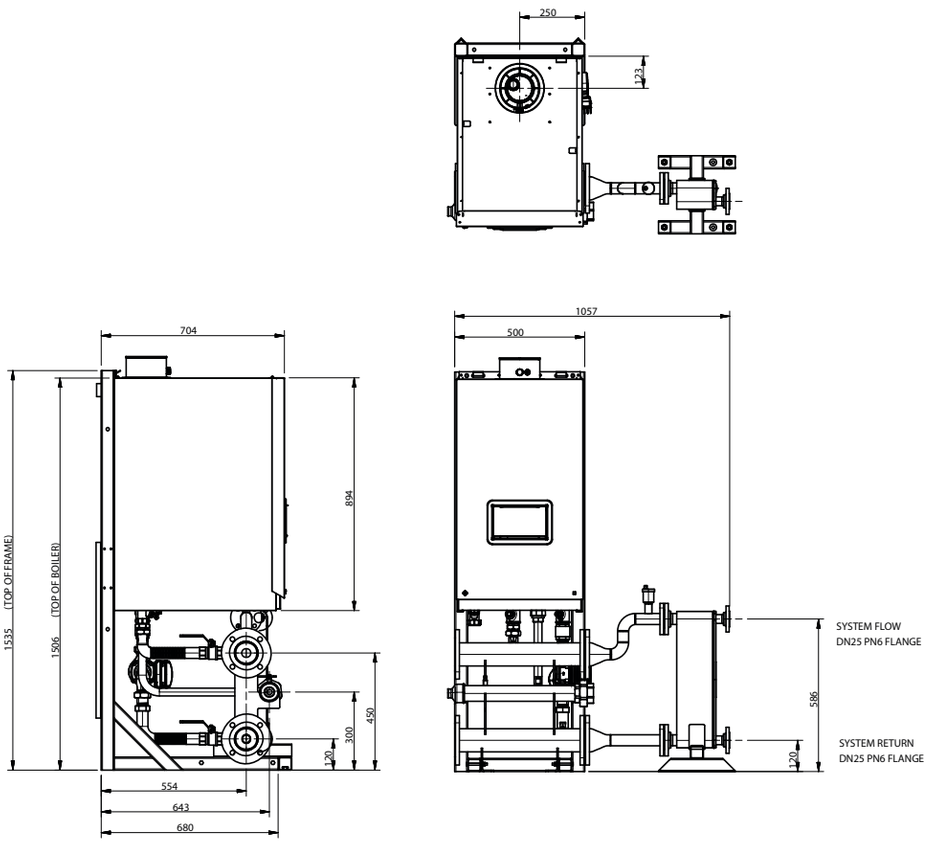

4.7 INSTALLATION DRAWING OF 2 BOILERS ON DN80 FRAME & HEADER KIT WITH 300 kW PLATE HEAT EXCHANGER

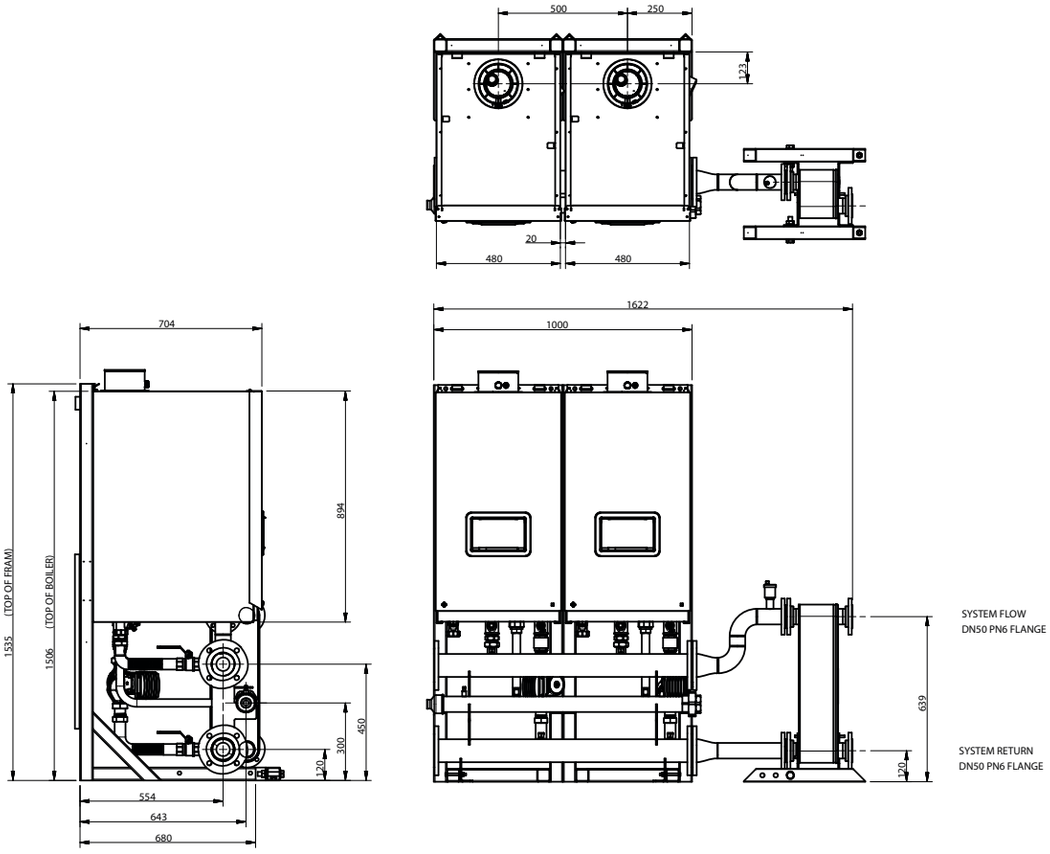

4.8 INSTALLATION DRAWING OF 3 BOILERS ON DN80 FRAME & HEADER KIT WITH 300 kW PLATE HEAT EXCHANGER

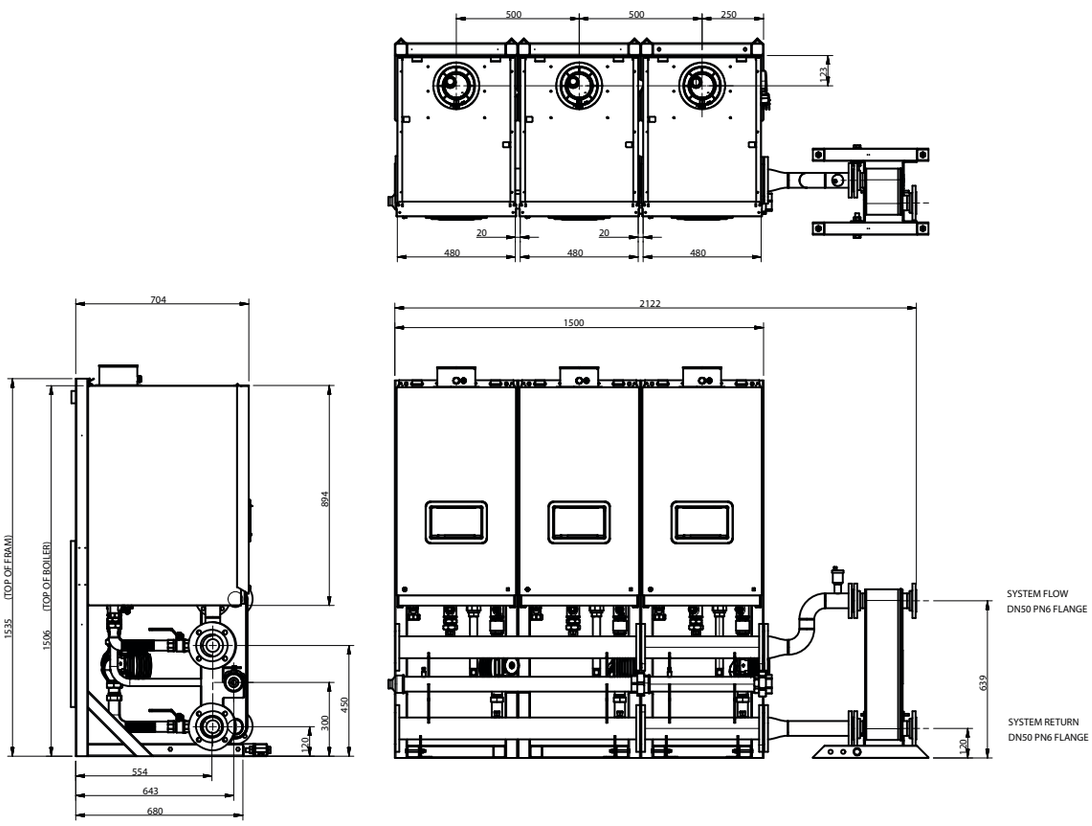

4.9 INSTALLATION DRAWING OF 3 BOILERS ON DN80 FRAME & HEADER KIT WITH 450 kW PLATE HEAT EXCHANGER

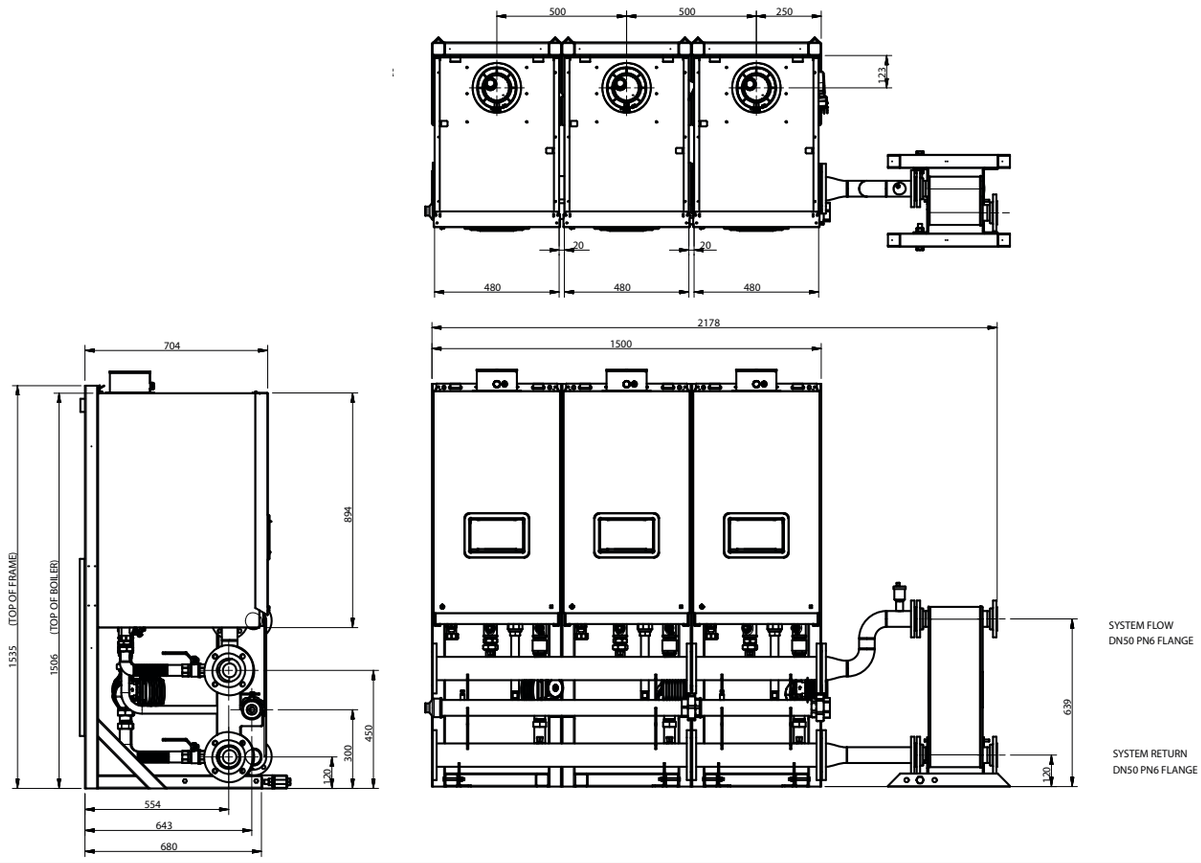

4.10 INSTALLATION DRAWING OF 4 BOILERS ON DN80 FRAME & HEADER KIT WITH 450kW PLATE HEAT EXCHANGER

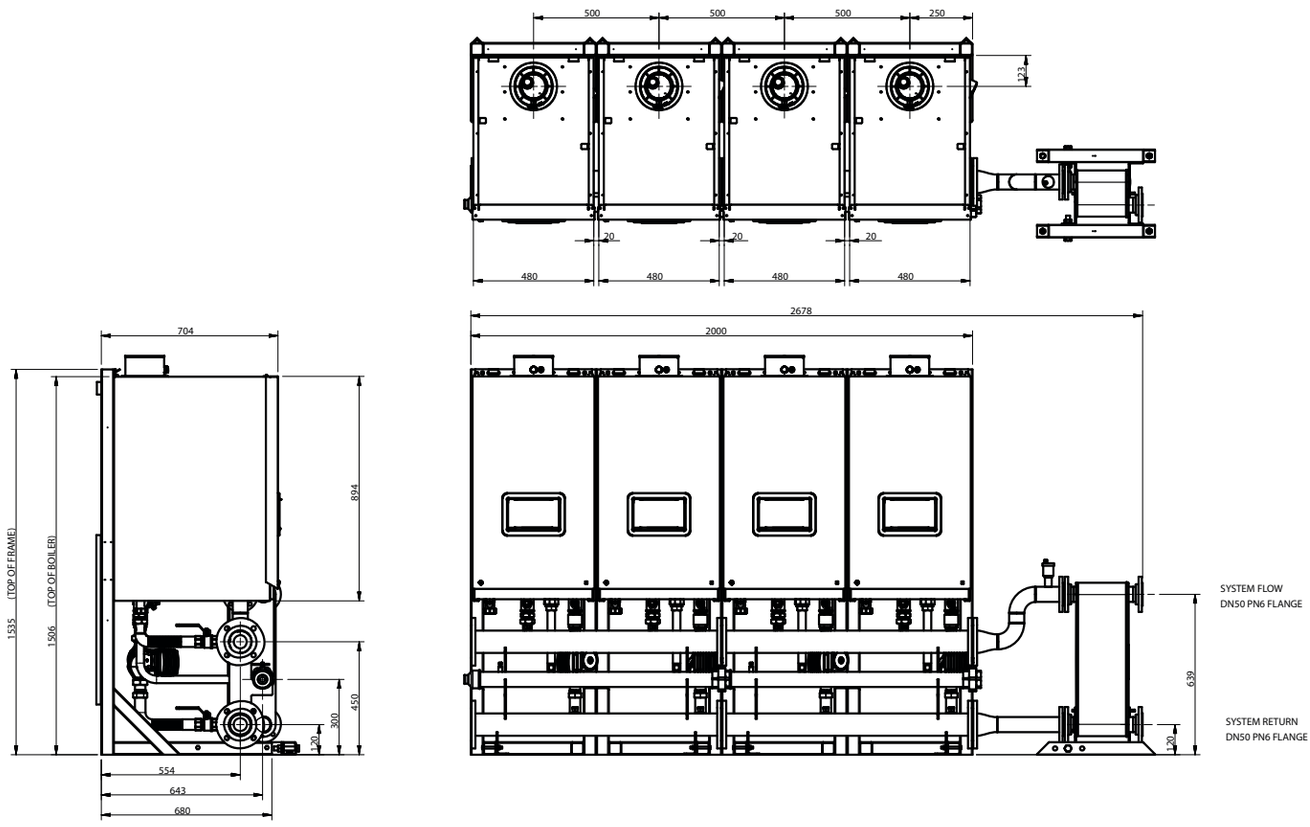

4.11 INSTALLATION DRAWING OF 4 BOILERS ON DN80 FRAME & HEADER KIT WITH 600 kW PLATE HEAT EXCHANGER

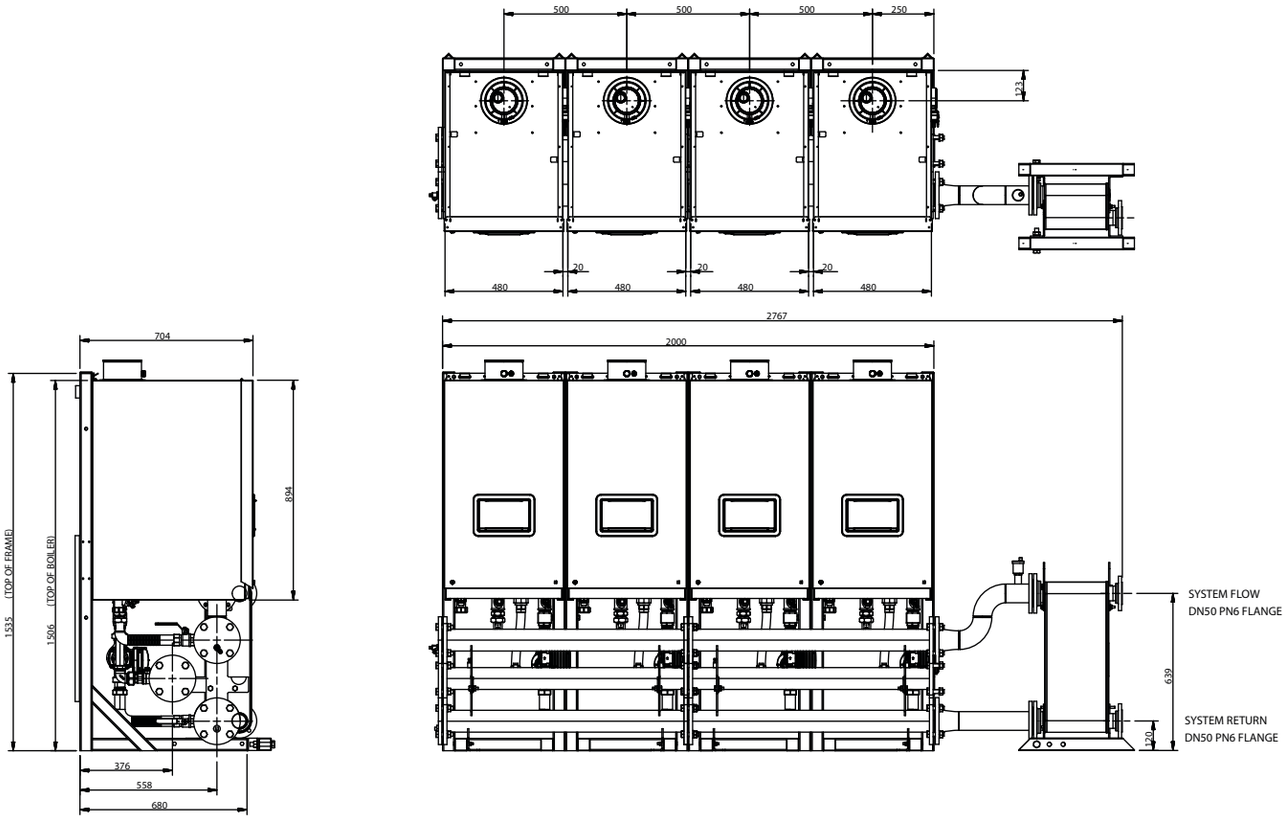

4.12 INSTALLATION DRAWING OF 5 BOILERS ON DN80 FRAME & HEADER KIT WITH 450 kW PLATE HEAT EXCHANGER

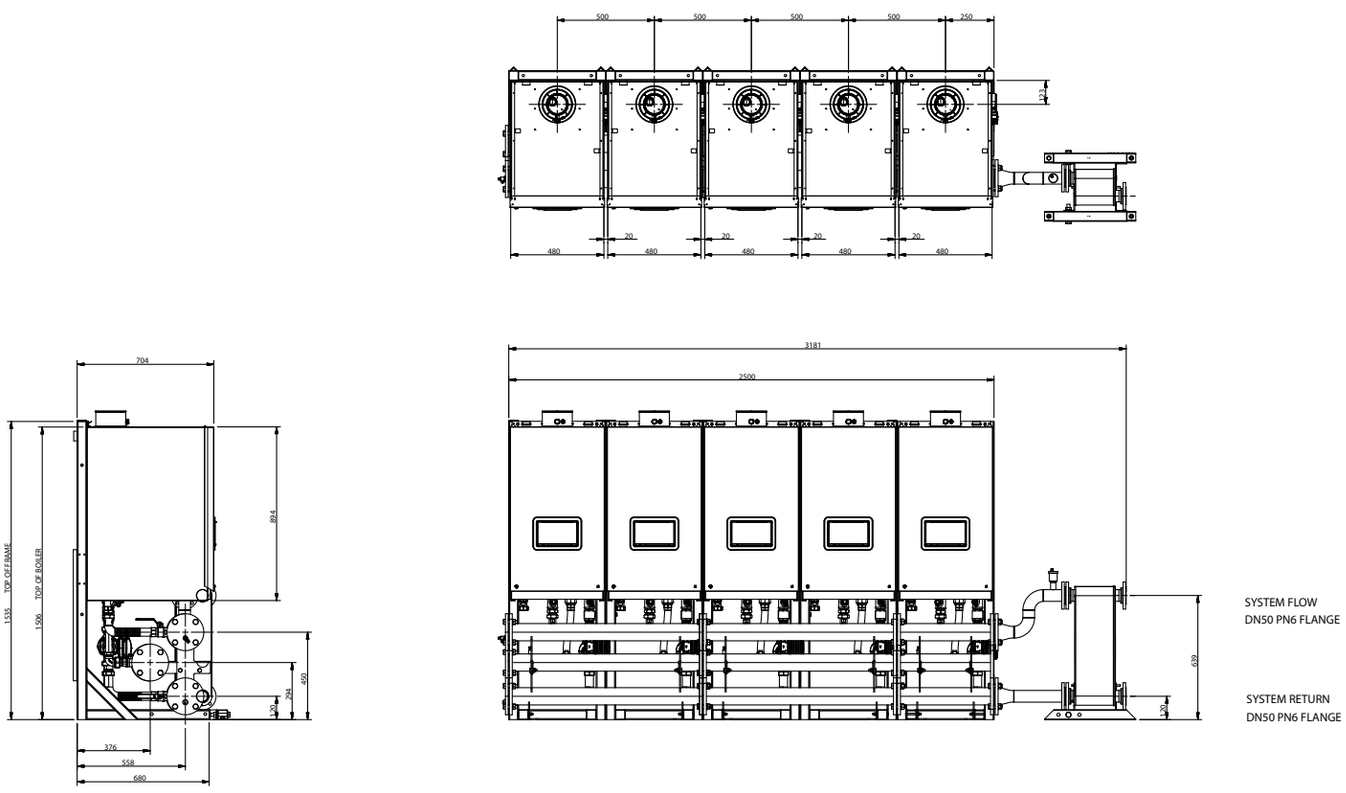

4.13 INSTALLATION DRAWING OF 5 BOILERS ON DN80 FRAME & HEADER KIT WITH 600 kW PLATE HEAT EXCHANGER

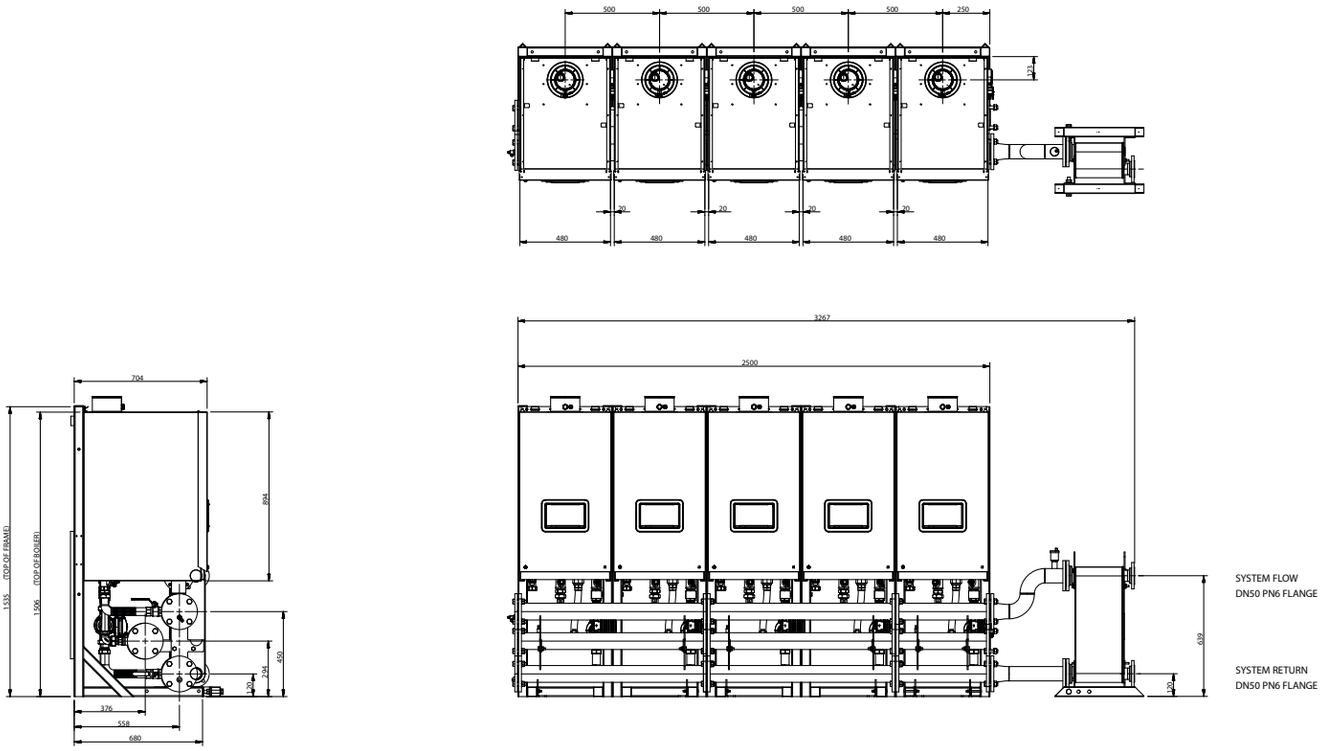

4.14 INSTALLATION DRAWING OF 6 BOILERS ON DN80 FRAME & HEADER KIT WITH 600 kW PLATE HEAT EXCHANGER

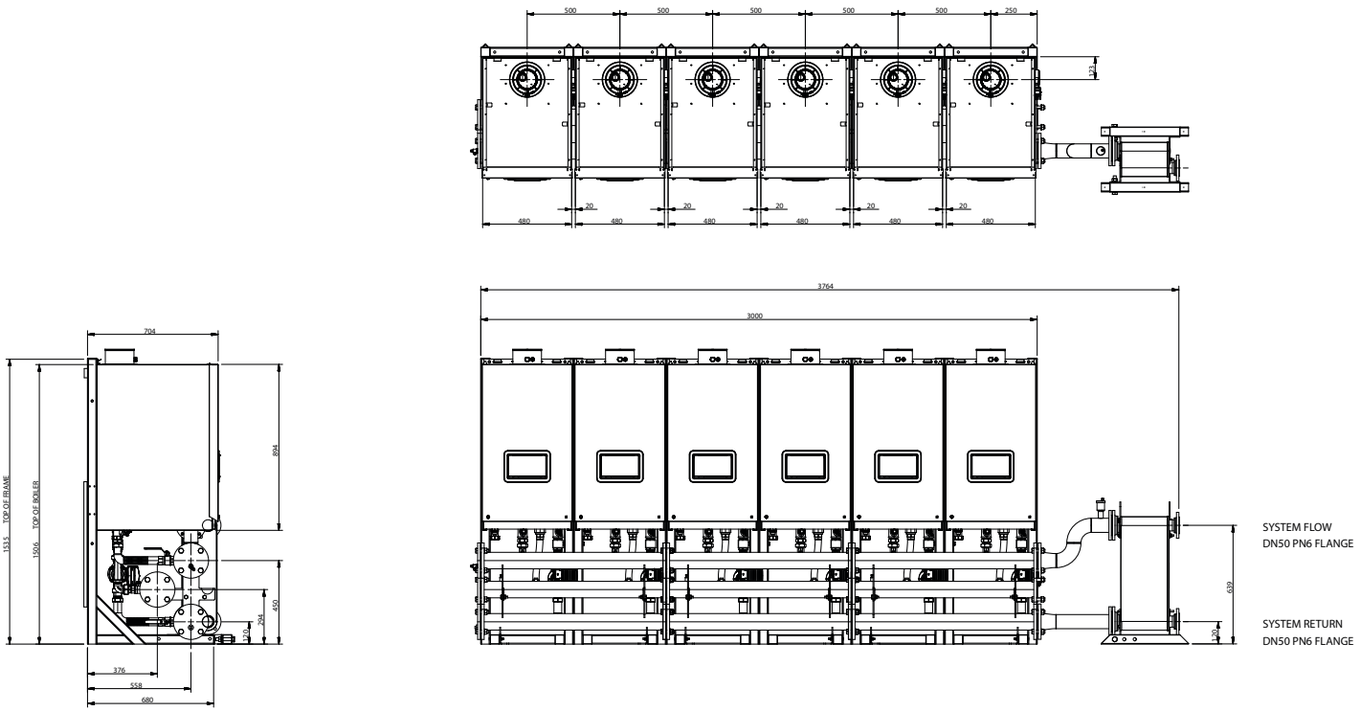

4.15 INSTALLATION DRAWING OF 2 BOILERS ON DN100 FRAME & HEADER KIT WITH 300 kW PLATE HEAT EXCHANGER

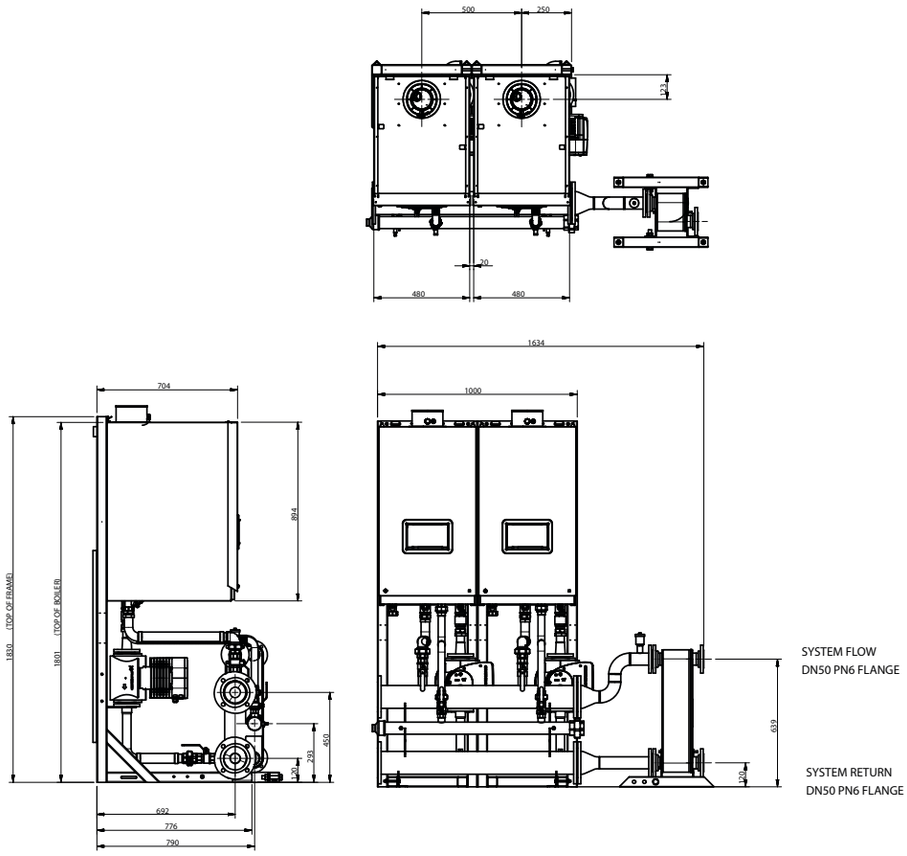

4.16 INSTALLATION DRAWING OF 3 BOILERS ON DN100 FRAME & HEADER KIT WITH 450 kW PLATE HEAT EXCHANGER

NOTES:

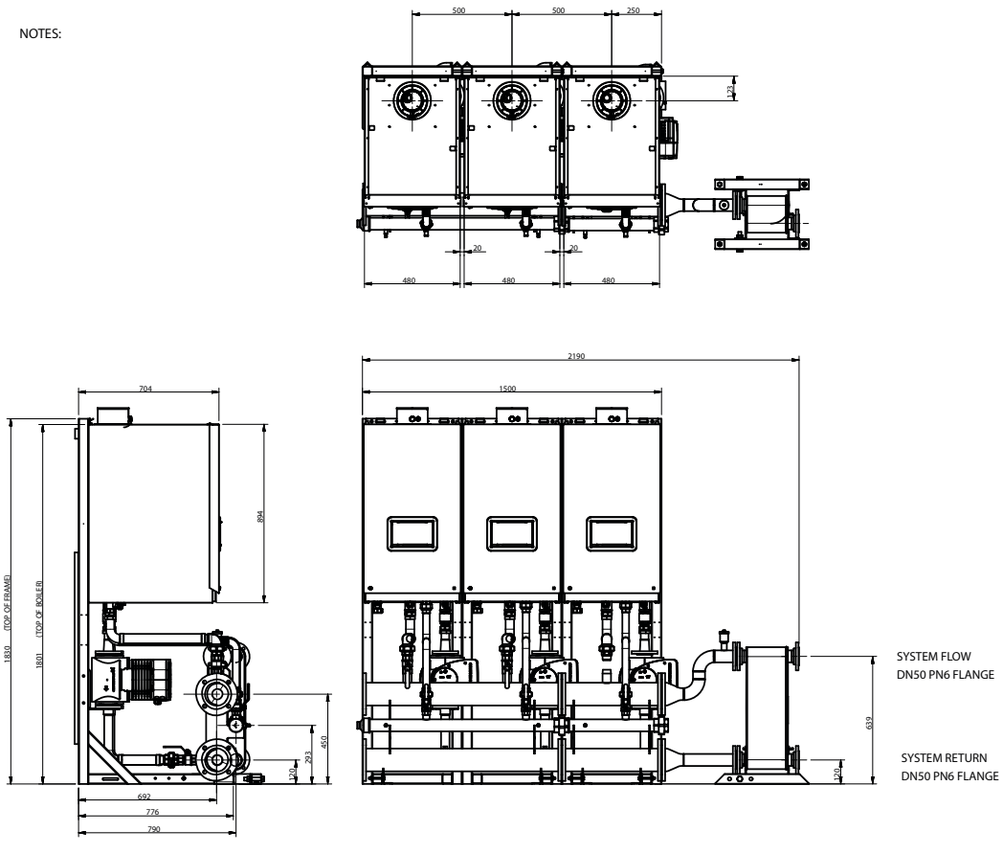

4.17 INSTALLATION DRAWING OF 4 BOILERS ON DN100 FRAME & HEADER KIT WITH 600 kW PLATE HEAT EXCHANGER

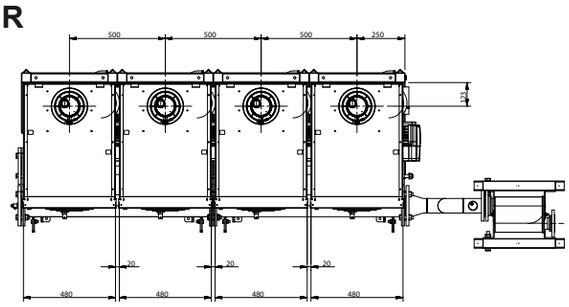

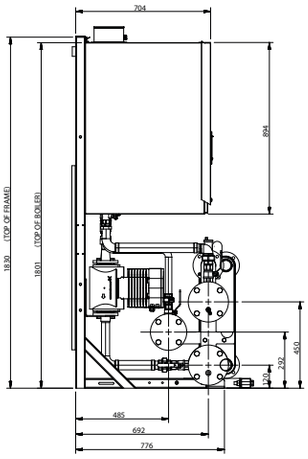

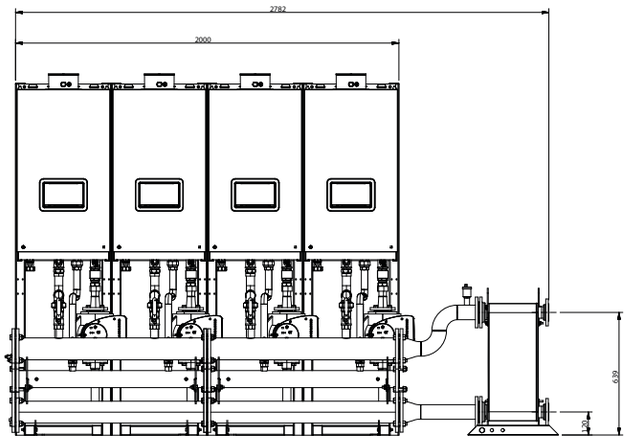

4.18 INSTALLATION DRAWING OF 5 BOILERS ON DN100 FRAME & HEADER KIT WITH 750 kW PLATE HEAT EXCHANGER

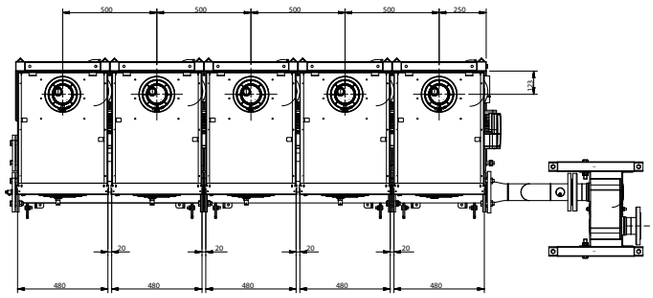

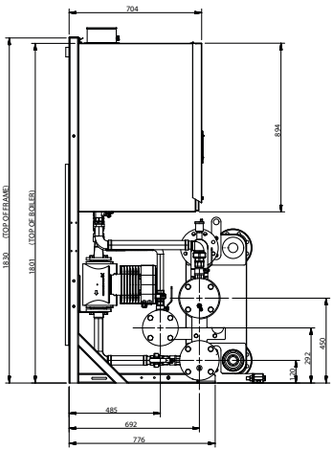

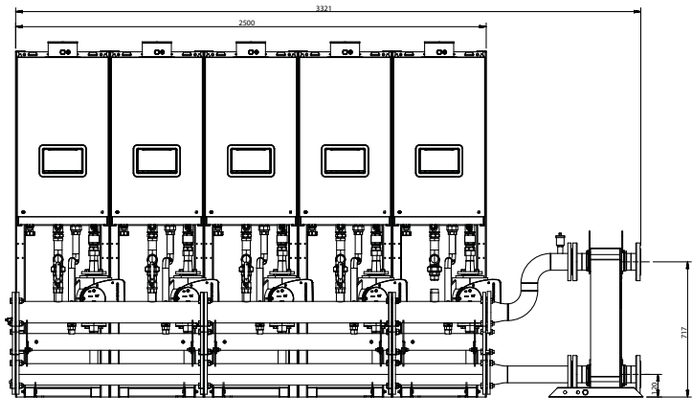

4.19 INSTALLATION DRAWING OF 6 BOILERS ON DN100 FRAME & HEADER KIT WITH 900 kW PLATE HEAT EXCHANGER

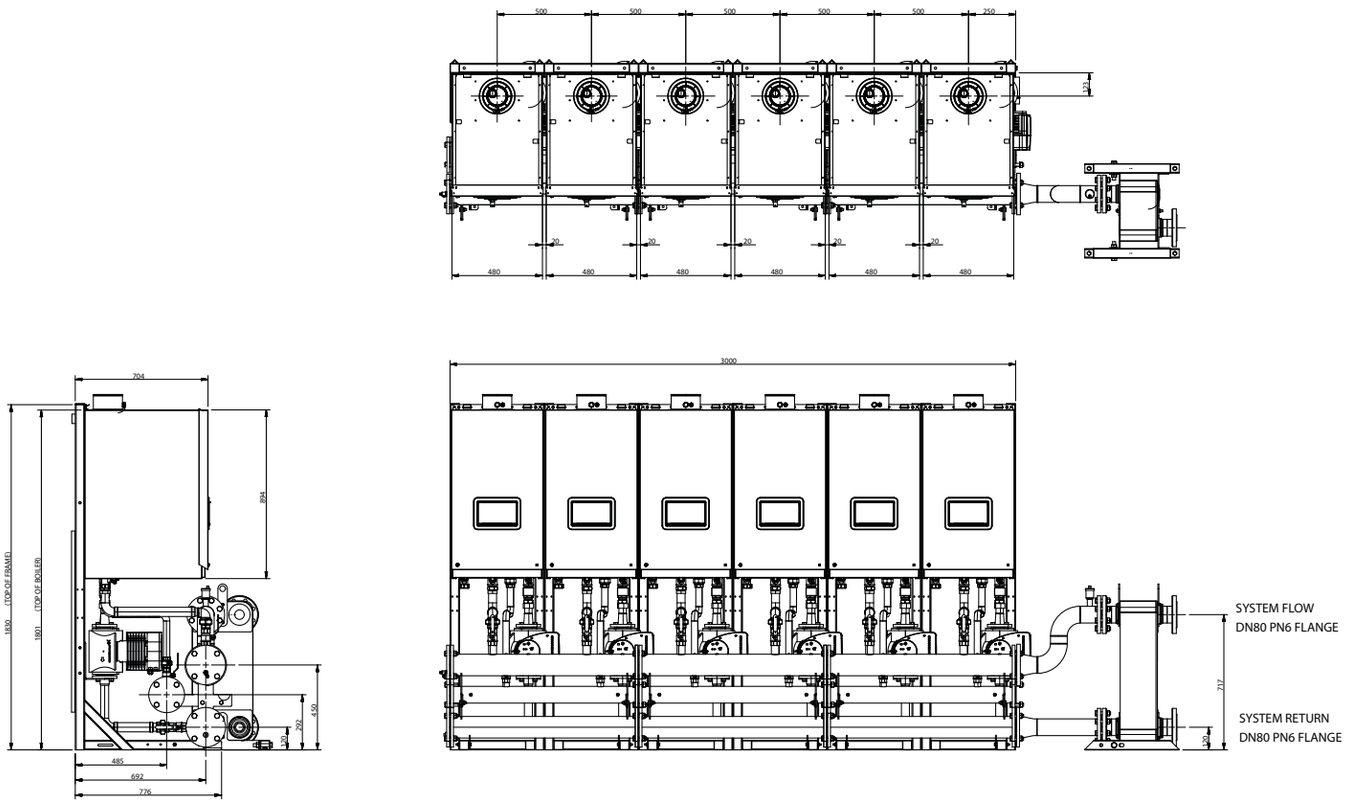

ACV U.K. Limited
St. David's Business Park,
Dalgety Bay
Fife, Scotland
KY11 9PF

Tel: 0044 (0)1383 820100

www.acv.com/gb

ACV pursues a policy of continuing improvement in the design and performance of its products. The right is therefore reserved to vary specification without notice.