EVO S

Retro-Fit Mounting Plate Kit

40, 60, 70
40P, 60P, 70P

Fitting Instructions

When replacing any part on this appliance, use only spare parts that you can be assured conform to the safety and performance specification that we require. Do not use reconditioned or copy parts that have not been clearly authorised by ACV.

For the very latest copy of literature for specification and maintenance practices visit our website www/acv/com/gb where you can download the relevant information in PDF format.

12/2022
UIN 236073 A01

IMPORTANT: NOTE TO THE INSTALLER: LEAVE THESE INSTRUCTIONS ADJACENT TO THE GAS METER.

1.1 INTRODUCTION

IMPORTANT: Before commencing installation, the mounting frame/s must stand on a flat and level floor. Before the boiler or headers are installed drill and fit the floor bolts (not provided) through the holes in the front of the frame feet.

Before you install the ACV EVO S boiler you must install the retrofit mounting plate.

The retrofit mounting plate will correctly align the ACV EVO S boiler on the Ideal EVO S support frame.

Note: The ACV EVO S boiler has a smaller footprint than the Ideal EVO S boiler, and will not fit without using the retrofit mounting plate.

1.2 KIT CONTENTS

A	1 x	40-70 kW Retro-Fit Mounting Plate
B	1 x	DN25-1” BSP Mac Union *
C	2 x	DN32 - 1 1/4” Gasket *
D	2 x	M6 Self Drilling Screw

* Supplied to assist with the boiler retro-fitting process

A

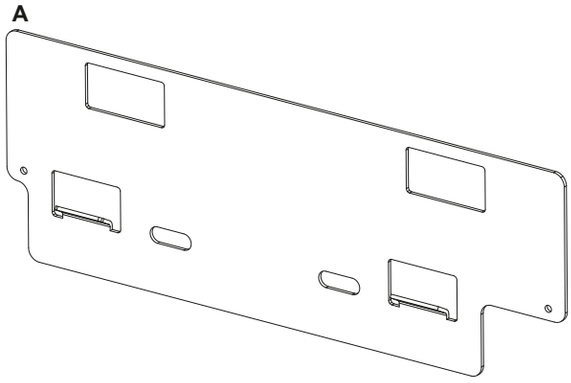

B

C

D

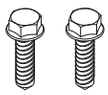

2.1 FITTING THE RETRO-FIT MOUNTING PLATE

1. Isolate all flue, water, gas and electrical services/supplies to the existing Ideal EVO S boiler.
2. Remove the boiler from the frame using suitable lifting equipment to safely handle the boiler weight. (Refer to Ideal EVO S Installation Manual).
3. Install the retro-fit mounting plate onto the two hooks on the support frame.
4. Install the 2 x M6 self drilling screws through the 2 holes (as below) into the support frame fully tightened.

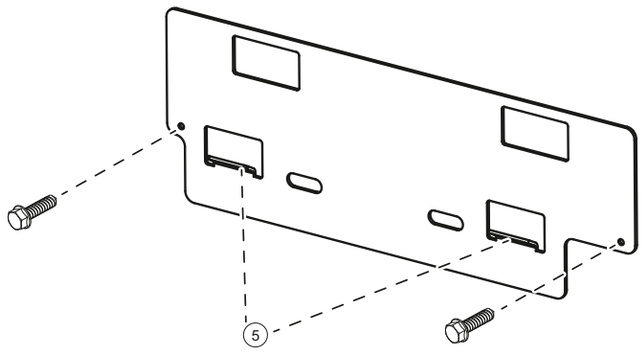

5. Install the ACV EVO S boiler onto the two locating hooks on the Retrofit mounting plate.
6. Reconnect all flue, water, gas and electrical services/ supplies to the ACV EVO S boiler.
7. Do all the checks as stated in the ACV EVO S Installation Manual Commissioning section.

ACV U.K. Limited
St. David's Business Park,
Dalgety Bay
Fife, Scotland
KY11 9PF

Tel: 0044 (0)1383 820100

www.acv.com/gb

ACV pursues a policy of continuing improvement in the design and performance of its products. The right is therefore reserved to vary specification without notice.