ACV
EXCELLENCE IN HOT WATER

EVO S

Plate Heat Exchanger Kits

40-150 kW Natural Gas and 40-120 kW Propane

INSTRUCTIONS

When replacing any part on this appliance, use only spare parts that you can be assured conform to the safety and performance specification that we require. Do not use reconditioned or copy parts that have not been clearly authorised by ACV.

For the very latest copy of literature for specification and maintenance practices visit our website www/acv/com/gb where you can download the relevant information in PDF format.

03/2023
UIN 236072-A01

CONTENTS

1 Introduction.....3

2 General Description of Cascade Systems 3

3 Multiple Boiler System Components.....5

4 Plate Heat Exchanger Kit (Optional Accessory).....9

5 Installation Drawings for Multiple Boiler Systems....10

Evo S - DISCLAIMER
Not all cascades included in this manual are available at initial product launch.
For availability refer to the table below:

Boiler	Water Header Size	Maximum No. Boilers in Cascade	Maximum Output in Cascade (kW)
Evo S 40	DN50	4	160
Evo S 60	DN50	4	240
Evo S 70	DN50	4	280
Evo S 80	DN80	4	320
Evo S 100	DN80	4	400
Evo S 120	DN80	3	360
Evo S 150	DN100	3	450

Note: This information will be updated in the next revision of this manual.

IMPORTANT

THESE INSTRUCTIONS MUST BE USED IN CONJUNCTION WITH THE FRAME & HEADER KIT INSTRUCTIONS SUPPLIED WITH THE EVO S HEADERS

1 INTRODUCTION

This technical data contains information for dimensioning & assembly of a cascade system kit for the Evo S.

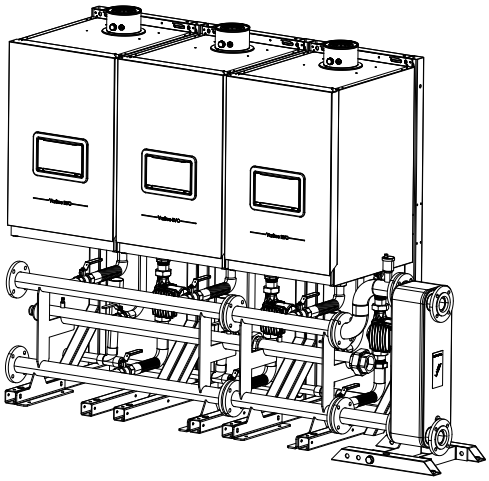

GENERAL DESCRIPTION OF FRAME & HEADER KITS

A requirement to spread the total required heat output over several boilers can be accommodated by the use of the Evo S multiple boiler frame & header kit options.

The flue configurations for the range of appliances using these system kits are C13, C33 & B23 (See appliance manual). ***Note****. In the case of the 150 kW boiler, this must be flued in accordance to the Clean Air Act.*

All headers and pipe work should be insulated in accordance with the Non Domestic Building Services Compliance Guide. To ensure compliance with the maximum heat loss criteria, insulation thickness should be calculated according to BS EN ISO 12241 using standardised assumptions.

2 GENERAL DESCRIPTION OF CASCADE SYSTEMS

2.1 FRAME AND HEADER KIT DESIGN OPTIONS

Note: All boilers need to be sized in accordance to the total required heat load and the modulation capabilities of the appliances.

Table 1 - Cascade Options

		Max Boilers in Cascade @ stated Header Size		PHEX Options
Boiler Type	**Boiler Header Size**	**No**	**Max Output (kW)**	
Evo S 40	DN50	4	160	60 kW, 150 kW, 300 kW
Evo S 60	DN50	4	240	
Evo S 70	DN50	4	280	
Evo S 80	DN80	6	480	150 kW, 300 kW, 450 kW, 600 kW
Evo S 100	DN80	6	600	
Evo S 120	DN80	5	600	
Evo S 150	DN100	6	900	300 kW, 450 kW, 600 kW, 750 kW, 900 kW

Table 2 - Available Boilers

kW	Product No.
Evo S 40	100008264200
Evo S 60	100008264300
Evo S 70	100008265900
Evo S 80	100008264400
Evo S 100	100008264500
Evo S 120	100008264600
Evo S 150	100008264700

Table 3 - PHEX Kit Outlet Connection Size

PHE Kits (kW)	Outlet Connection Size
60	DN25 FLANGE
150	
300	DN50 FLANGE
450	
600	
750	DN80 FLANGE
900	

Note: The total system output must not exceed the Plate Heat Exchanger Kit Rating.

One Plate Heat Exchanger Kit required per cascade.

continued . . . . .

2.2 MULTIPLE BOILER INSTALLATIONS

For installing 1 to 6 boilers, the product range includes water and gas headers capable of assembly using threaded socket, compression and PN6 flange connections.

2.3 SYSTEM SEPARATION: LOW LOSS HEADER & PLATE HEAT EXCHANGER

A low loss header or plate heat exchanger allows flow separation within a heating system.

This allows two flow circuits to operate with their own flow and pressure drop environments whilst effectively transferring heat to its adjoined water circuit.

This enables the modern high resistant, high efficiency boilers to operate under their optimum conditions, while the main heating circuit operates to its own controlled optimum requirements. ACV's brazed plate heat exchangers ensure optimum heat transfer efficiency and low resistance within a compact footprint. The heat exchanger allows hydraulic segregation between the boiler primary and secondary heating circuits. Used in conjunction with ACV's 40-70 kW and 80-150 kW frame and header kits covering duties from 60 kW to 900 kW.

The design is based on standard components and a modular brazed concept. Each unit is manufactured to the highest standard and part of the AHRI certified program that ensures thermal performance in accordance with the product specifications.

Benefits

- Compact design
- No gaskets
- Easy install with ACV's Commercial Frame and Header Kits
- Low maintenance/ self-cleaning
- All units are pressure tested

2.4 OUTPUT CONTROL

All pumps are designed to be wired to the appliance to allow a controlled pump over run.

If using an external pump control system the capability of a timed pump over run signal provided by the appliance must be maintained at all times.

The optional LPB bus accessory control can be installed (1 per boiler) to enable cascade control.

2.5 GAS SUPPLY

All Evo S boilers are compatible with natural gas or propane except the 150 kW model which is natural gas only.

Connection to the gas supply must be in accordance to with all the applicable regulations.

A single frame and DN50 water header kit will require the gas inlet to be made up to the gas tap provided, connecting it to the inlet of the appliance.

Frame and header kits will be supplied with a 2” or 3" gas header and all the necessary components and pipe work to connect it to the appliances.

Note: Test points are provided at each end of the 2” or 3" gas header. The test point nearest to the gas inlet is intended to be used as the appliance inlet pressure point.

2.6 ASSEMBLY

The frames must be located in a suitable place that affords a flat and level floor-area of suitable load bearing capacity. Care must be taken when locating the frames that space is available for the servicing, installation and maintenance of the appliance and all of the associated connections and equipment. (See appliance manuals)

When using multiple frames they must be bolted together and where necessary secured to the floor.

2.7 SAFE HANDLING

Installation may require 2 or more operatives to move it to its installation site, remove it from its packaging base and during movement into its installation location. Manoeuvring may include the use of a sack truck and involve lifting, pushing and pulling.

Caution should be exercised during these operations.

Operatives should be knowledgeable in handling techniques when performing these tasks and the following precautions should be considered:

- Grip the boiler at the base
- Be physically capable
- Use personal protective equipment as appropriate, e.g. gloves, safety footwear

During all manoeuvres and handling actions, every attempt should be made to ensure the following unless unavoidable and/or the weight is light.

- Keep back straight
- Avoid twisting at the waist
- Avoid upper body/top heavy bending
- Always grip with the palm of the hand
- Use designated hand holds
- Keep load as close to the body as possible
- Always use assistance if required

3 MULTIPLE BOILER SYSTEM COMPONENTS

3.1 GENERAL

The multiple boiler systems consist of the following components:

- Frame and Header kit (1 or 2 wide)
- Boiler gas header.
- Boiler flow and return headers supported on mounting skid
- Hardware pack (includes essential connection and valve components)
- Boiler Shunt pump (MUST be used, sold seperately)

3.2 MAIN WATER HEADERS

Each header kit provides water flow and return headers sized either DN50, DN80 or DN100 dependent on total maximum combined heating output required.

3.3 GAS HEADER

The Gas header consists of custom manufactured manifolds of either 2" or 3" (depending on total heating output). This is located in a cradle incorporated within the header mounting skid.

3.4 LOW LOSS HEADERS (MIXING HEADER) OPTION

The mixing headers are supplied with an auto air vent and drain point as standard.

3.5 BOILER SHUNT PUMP

Pump kits and External pump controls **(sold separately)** are designed to provide the optimum flow around the appliance water circuit ensuring the maximum flow rates are contained within the design constraints of the appliance.

It is not recommended to fit additional pumps directly to the appliance circuit unless they have been designed to ensure the maximum permissible appliance flow rate is not exceeded.

3.6 BOILER CONNECTION KITS

The connection kit contains the following components:

1. Boiler return leg complete with isolating valve, pump, non return valve, drain cock and fibre seals
2. Boiler flow leg complete with isolating valve, pressure relief valve and fibre seals
3. Header blanking flanges, fasteners and gaskets
4. Mixing header fasteners and gasket

FLOW

LEGEND

1. Isolation Valve
2. Boiler Flow Flexible Connection
3. 1 ¼" Male Parallel/Taper Hex Nipple
4. 1 ¼" x 1 ¼" x ¾" Tee
5. ¾" Taper Plug

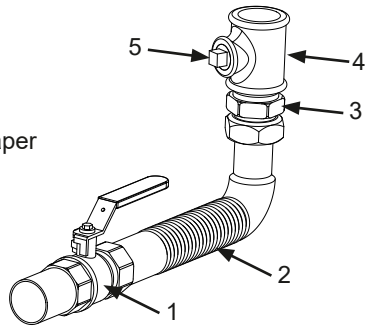

RETURN

LEGEND

1. Isolation Valve
2. Boiler Flow Flexible Connection
3. Pump Union
4. Pump inc Gaskets
5. Non Return Valve
6. 1 ¼" x 1 ¼" x ¾" Tee
7. Drain Cock

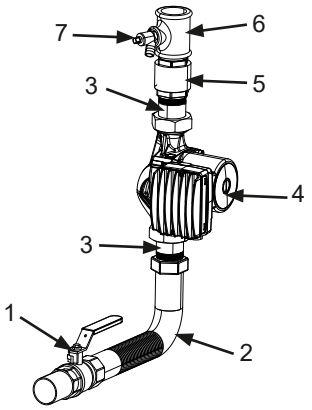

FIGURE 1 - DN50 and DN80

LEGEND

1. Isolation Valve
2. 1 ¼" Male/Female Swivel Elbow
3. Boiler Flow Flexible Connection
4. 1 ¼" Male Parallel/Taper Hex Nipple
5. 1 ¼" x 1 ¼" x ¾" Tee
6. ¾" Taper Plug

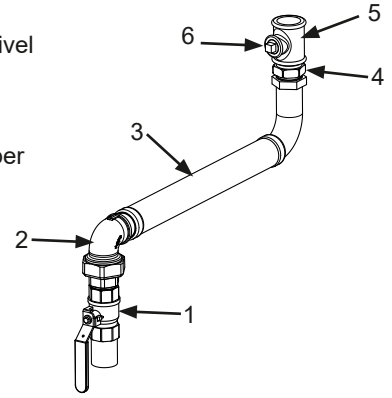

LEGEND

1. Isolation Valve
2. 1 ¼" Male/Female Mac Union
3. Boiler Flow Flexible Connection
4. Pump inc Gaskets
5. Flange Pump Adapter
6. 1 ¼" Male Parallel/Taper Hex Nipple
7. Non Return valve
8. 1 ¼" x 1 ¼" x ½" Tee
9. Drain Cock

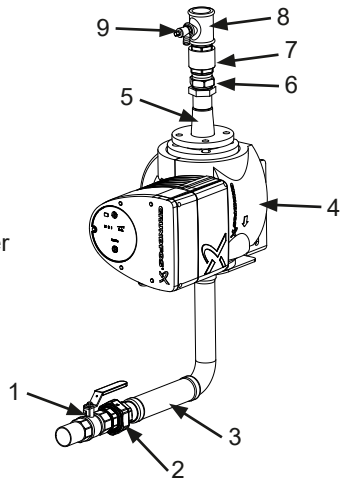

FIGURE 2 - DN100

3.7 INSTALLATION AREA AND DIMENSIONS

Care must be taken to ensure adequate access for boiler / cascade system installation and servicing.

A minimum of 450 mm clearance must be provided from the front of the installed boilers in cascade to facilitate boiler servicing. Additional clearance must also be considered in the event of boiler replacement.

Consideration to connecting heating flow and return pipework, gas supply and condensate drainage must be given. Routing of the condensate drain must be made to allow a minimum fall of 1 in 20 away from the installed boilers in cascade, throughout its length. Adequate room above the boilers must be provided to install and service the boiler flue system. Further information with respect to flue and condensate drain connection is provided in the installation and servicing instructions provided within the boilers packaging carton.

3.8 SYSTEM REQUIREMENTS

Notes.

1. Ancillary components can be connected to the system via the G ¾" tapping's on the header blanking flanges. See diagram below for guidance (diagram for illustration purposes only).
2. The method of filling, refilling, topping up or flushing sealed primary circuits from the mains via a temporary hose connection is only allowed if acceptable to the local water authority.
3. When installing the filling device, it must be connected as shown to fully comply with the water regulations. This may involve the fitting of an approved WRAS approved isolator valve to the mains supply, and appropriate back flow prevention device.

Pressure relief valve (Supplied with boiler)

1. A spring loaded non-adjustable (40-70 kW) 4 bar and (80-150 kW) 6 bar pressure relief valve complying with the relevant standards of BS6759 Pt1 is fitted close to the boiler with no intervening valve or restriction.
2. A manual testing device.
3. The pressure relief valve outlet should be piped to ensure discharge cannot create a hazard to personal or damage electrical components or wiring.

Pressure gauge (Not supplied)

A pressure gauge must be fitted to the system visible from the filling point.

Expansion vessel (Not supplied)

1. A diaphragm type expansion vessel complying with BS. EN 13831 must be fitted without incorporating isolation valves of any sort.
2. The vessel capacity must be adequate to accept the expansion of system water when heated to 110 °C.
3. The charge pressure must not be less than the static water head above the vessel. The pressure attained in the system when heated to 110 °C should be at least 0.35 bar less than the lift pressure of the pressure relief valve. For guidance on vessel sizing refer to the Table 4.

Note: The largest Plate Heat Exchanger (900 kW) with 6 x Evo S 150 kW boilers would require a 18 litre expansion vessel.

System drain cock (Not supplied)

A drain cock should be fitted to the lower blanking flange on the lowest header.

Table 4 - Vessel size

Plate Heat Exchanger Kits (kW)	Recommended Expansion Vessel Capacity (litre)
60	4
150	4
300	8
450	12
600	12
750	18
900	18

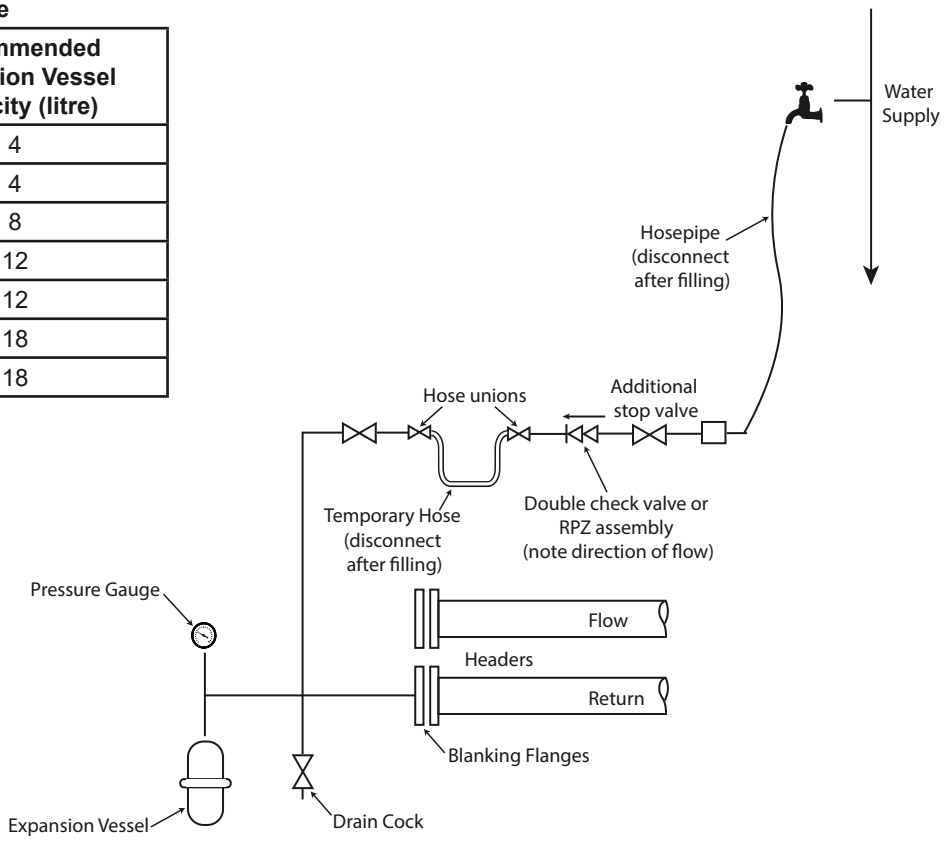

IMPORTANT POINTS

Before commencing installation:

When frame mounting:

- The frames must stand on a flat and level floor of suitable load bearing capacity.
- When using a frame and header kit, the header must be bolted to the frame before the hoses are connected to the boiler.

MOUNTING FRAME MUST BE SECURED TO THE FLOOR WITH BOLTS

These Installations refer to perpendicular wall and floor. If walls are not perpendicular, it is recommended that a frame and header kit be used. The correct number of frames and headers should be ordered.

Allowances must be made for installation where features are in place that may affect the nominal installation conditions.

4 PLATE HEAT EXCHANGER KIT (OPTIONAL ACCESSORY)

4.1 PLATE HEAT EXCHANGER

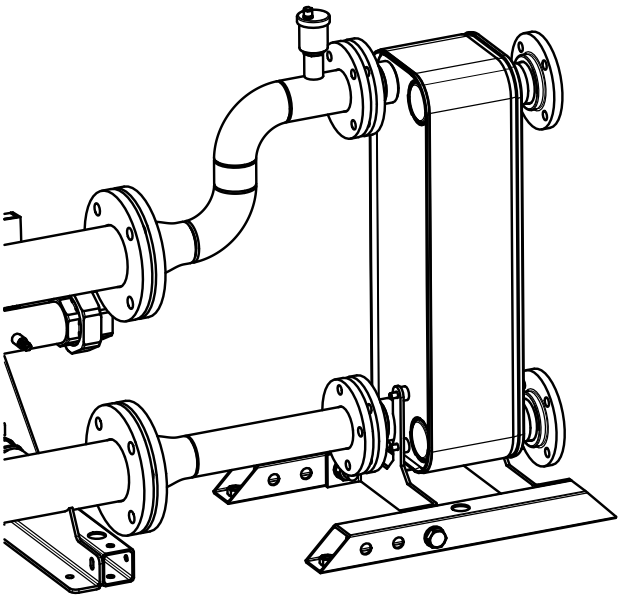

4.2 FITTING PLATE HEAT EXCHANGER AND BLANKING FLANGES

1. Fit the Plate Heat Exchanger and blanking flanges in the chosen positions.

   Note: *Plate Heat Exchanger can be located either LHS or RHS of the headers.*

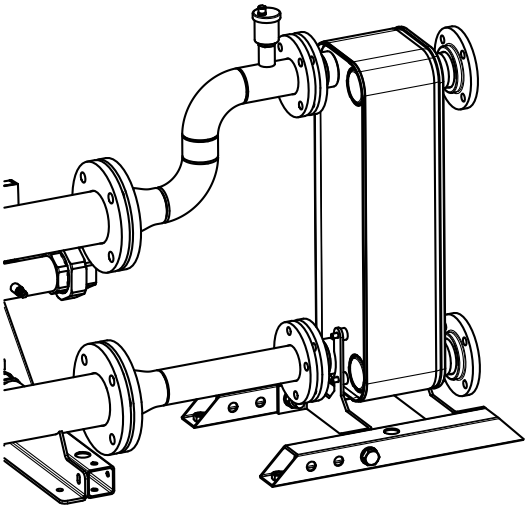

Plate Heat Exchanger

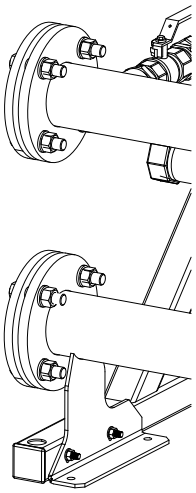

Blanking Flange

5 INSTALLATION DRAWINGS FOR MULTIPLE BOILER SYSTEMS

5.1 GENERAL

Note: The total system output must not exceed the Plate Heat Exchanger Kit Rating - refer to Table 1 for the range of Plate Heat Exchanger kits available.

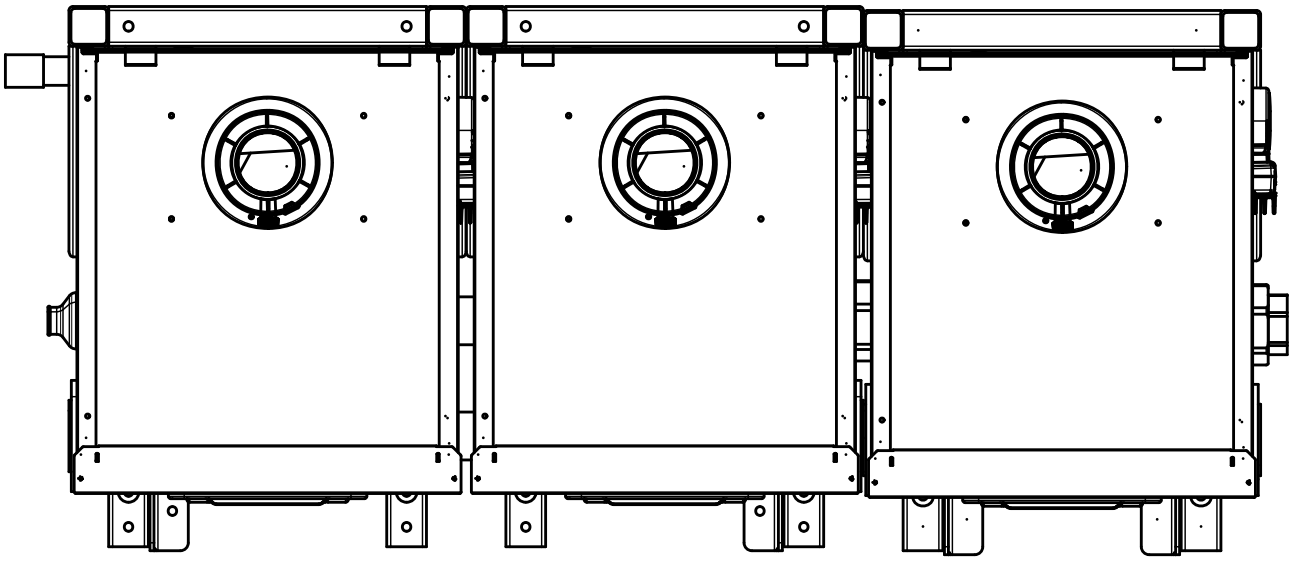

5.2.1 INSTALLATION DRAWING OF 1 BOILER ON DN50 FRAME & HEADER KIT WITH 60 kW PLATE HEAT EXCHANGER

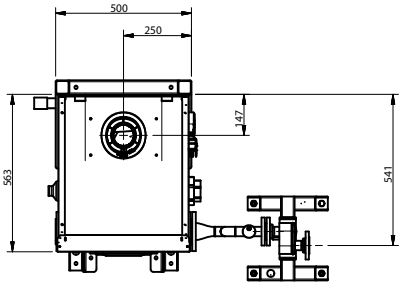

NOTES:

1. PLATE HEAT EXCHANGER AND GAS CONNECTIONS CAN BE EITHER THE LHS OR RHS OF THE ASSEMBLY TO SUIT THE INSTALLATION.

2. OPTIONAL 60 kW PLATE HEAT EXCHANGER (XB150035) ONE PER CASCADE.

3. ALL DIMENSIONS IN mm

4. COMPATIBLE BOILERS: 40 kW / 60 kW

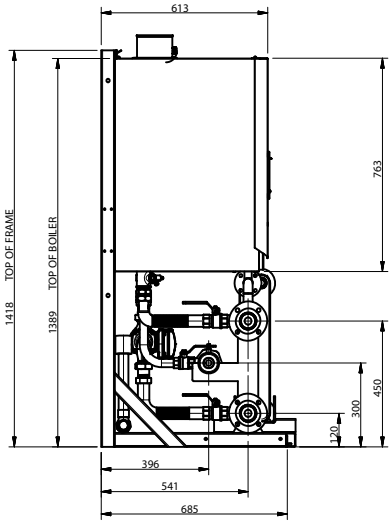

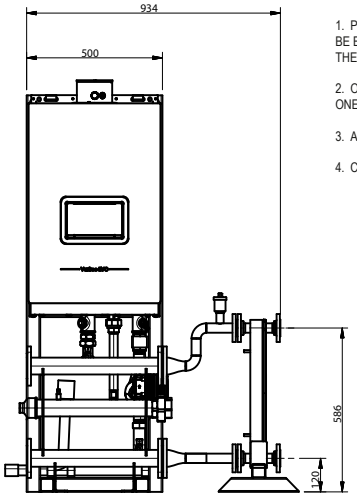

SYSTEM FLOW
DN25PN6 FLANGE

SYSTEM RETURN
DN25 PN6 FLANGE

5.2.2 INSTALLATION DRAWING OF 2 BOILER ON DN50 FRAME & HEADER KIT WITH 150 kW PLATE HEAT EXCHANGER

NOTES:

1. PLATE HEAT EXCHANGER AND GAS CONNECTIONS CAN BE EITHER THE LHS OR RHS OF THE ASSEMBLY TO SUIT THE INSTALLATION.

2. OPTIONAL 150 kW PLATE HEAT EXCHANGER (XB150036) ONE PER CASCADE.

3. ALL DIMENSIONS IN mm

4. COMPATIBLE BOILERS: 40 kW / 60 kW / 70 kW

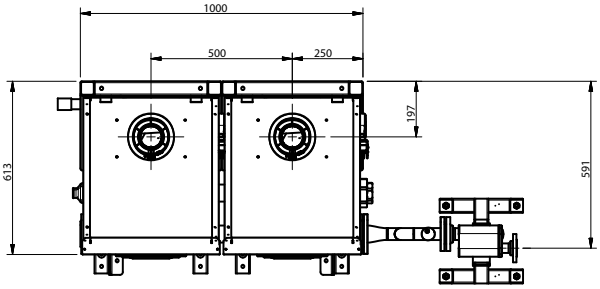

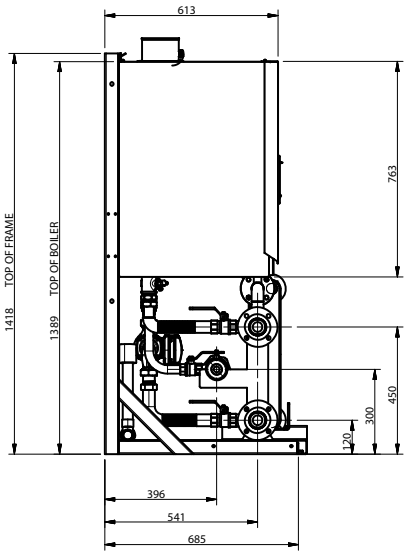

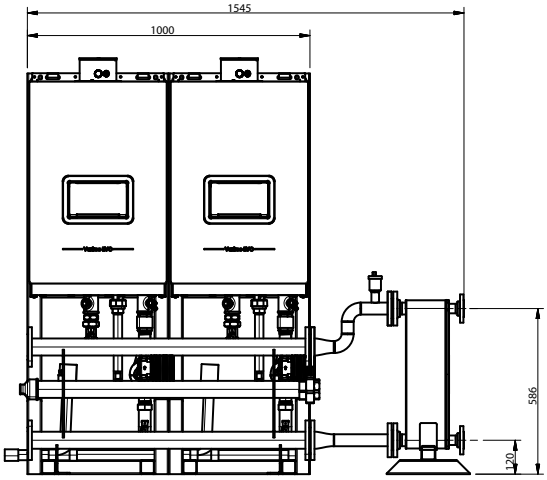

SYSTEM FLOW
DN25 PN6 FLANGE

SYSTEM RETURN
DN25 PN6 FLANGE

5.2.3 INSTALLATION DRAWING OF 3 BOILERS ON DN50 FRAME & HEADER KIT WITH 150 kW PLATE HEAT EXCHANGER

NOTES:

1. PLATE HEAT EXCHANGER AND GAS CONNECTIONS CAN BE EITHER THE LHS OR RHS OF THE ASSEMBLY TO SUIT THE INSTALLATION.

2. OPTIONAL 150 kW PLATE HEAT EXCHANGER (XB150036) ONE PER CASCADE.

3. ALL DIMENSIONS IN mm

4. COMPATIBLE BOILERS: 40 kW

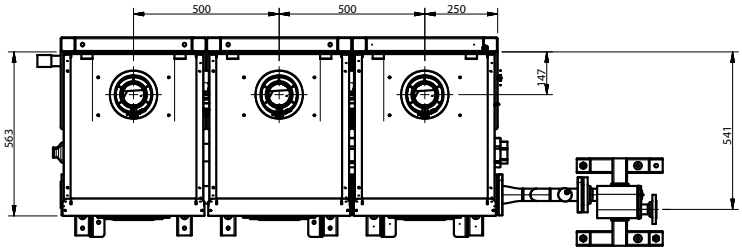

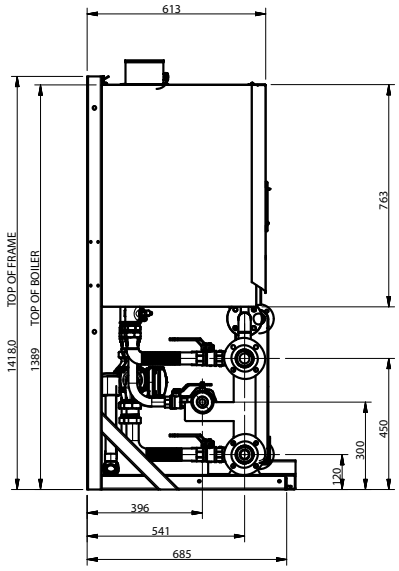

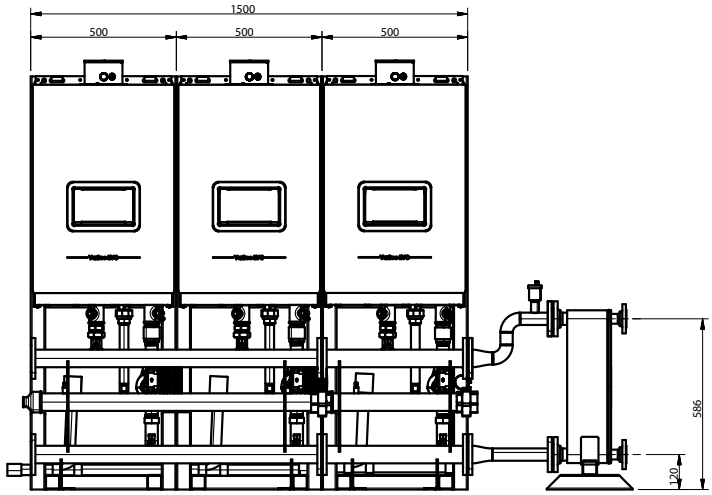

5.2.4 INSTALLATION DRAWING OF 3 BOILERS ON DN50 FRAME & HEADER KIT WITH 300 kW PLATE HEAT EXCHANGER

NOTES:

1. PLATE HEAT EXCHANGER AND GAS CONNECTIONS CAN BE EITHER THE LHS OR RHS OF THE ASSEMBLY TO SUIT THE INSTALLATION.

2. OPTIONAL 300 kW PLATE HEAT EXCHANGER (XB150037) ONE PER CASCADE.

3. ALL DIMENSIONS IN mm

4. COMPATIBLE BOILERS: 60 kW / 70 kW

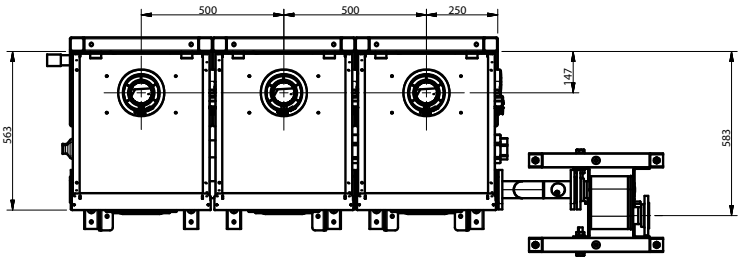

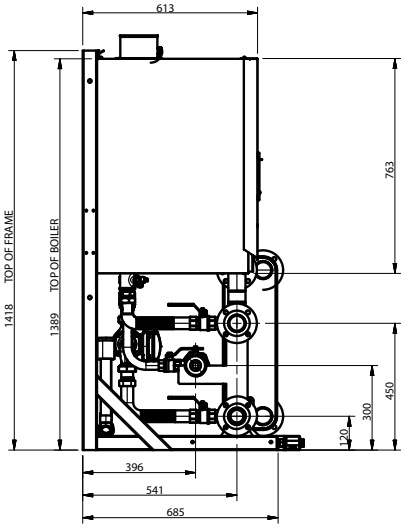

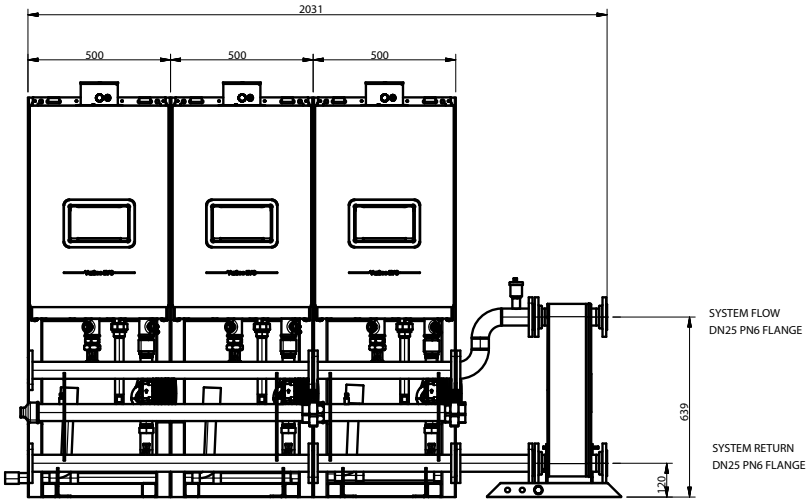

5.2.5 INSTALLATION DRAWING OF 4 BOILERS ON DN50 FRAME & HEADER KIT WITH 300 kW PLATE HEAT EXCHANGER

NOTES:

1. PLATE HEAT EXCHANGER AND GAS CONNECTIONS CAN BE EITHER THE LHS OR RHS OF THE ASSEMBLY TO SUIT THE INSTALLATION.

2. OPTIONAL 300 kW PLATE HEAT EXCHANGER (XB150037) ONE PER CASCADE.

3. ALL DIMENSIONS IN mm

4. COMPATIBLE BOILERS: 40 kW / 60 kW / 70 kW

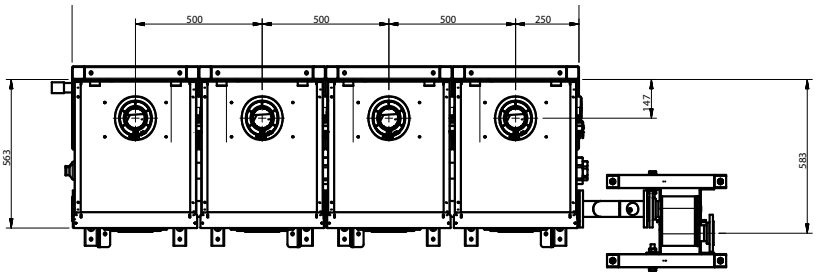

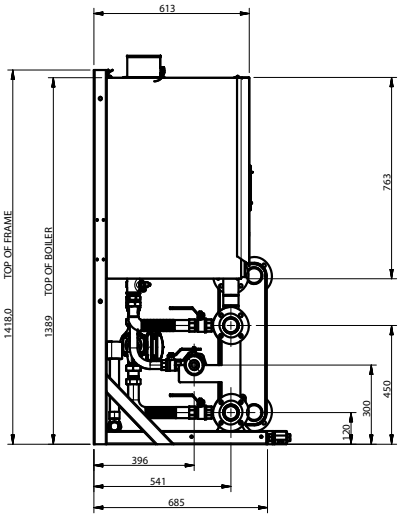

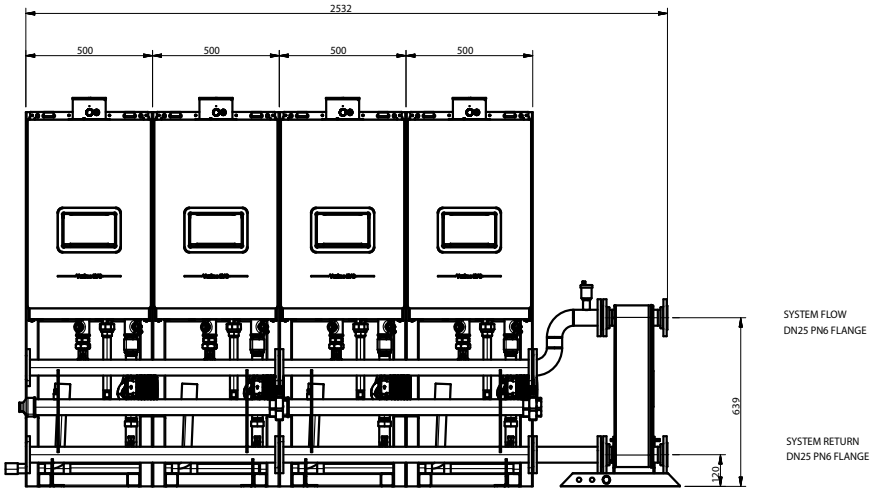

5.2.6 INSTALLATION DRAWING OF 1 BOILERS ON DN80 FRAME & HEADER KIT WITH 150 kW PLATE HEAT EXCHANGER

NOTES:

1. PLATE HEAT EXCHANGER AND GAS CONNECTIONS CAN BE EITHER THE LHS OR RHS OF THE ASSEMBLY TO SUIT THE INSTALLATION.

2. OPTIONAL 150 kW PLATE HEAT EXCHANGER (XB150038) ONE PER CASCADE.

3. ALL DIMENSIONS IN mm

4. COMPATIBLE BOILERS: 80 kW / 100 kW / 120 kW

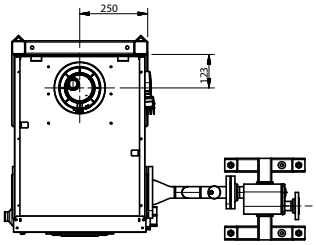

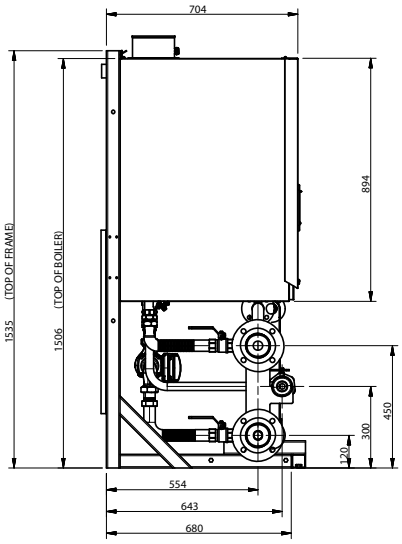

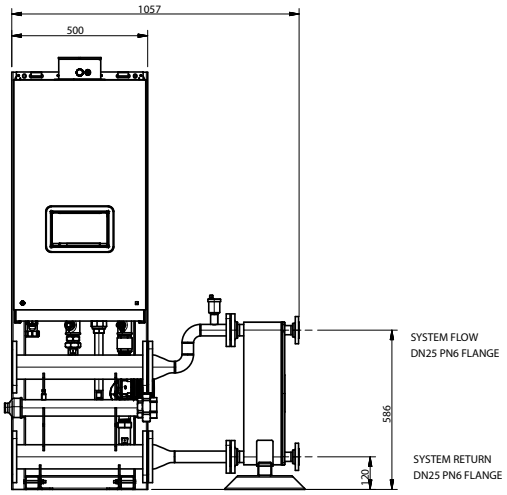

5.2.7 INSTALLATION DRAWING OF 2 BOILERS ON DN80 FRAME & HEADER KIT WITH 300 kW PLATE HEAT EXCHANGER

NOTES:

1. PLATE HEAT EXCHANGER AND GAS CONNECTIONS CAN BE EITHER THE LHS OR RHS OF THE ASSEMBLY TO SUIT THE INSTALLATION.

2. OPTIONAL 300 kW PLATE HEAT EXCHANGER (XB150039) ONE PER CASCADE.

3. ALL DIMENSIONS IN mm

4. COMPATIBLE BOILERS: 80 kW / 100 kW / 120 kW

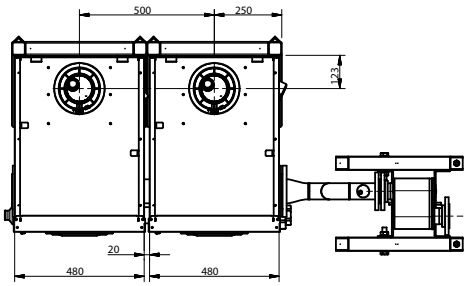

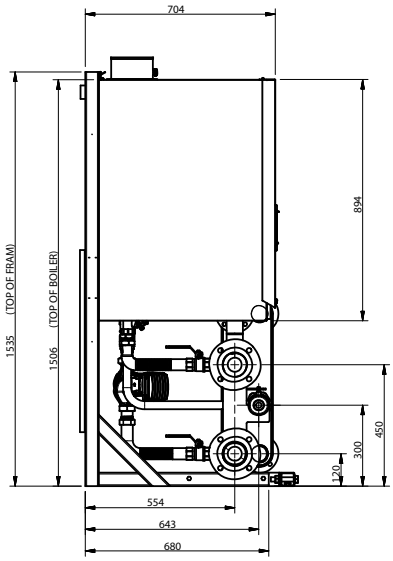

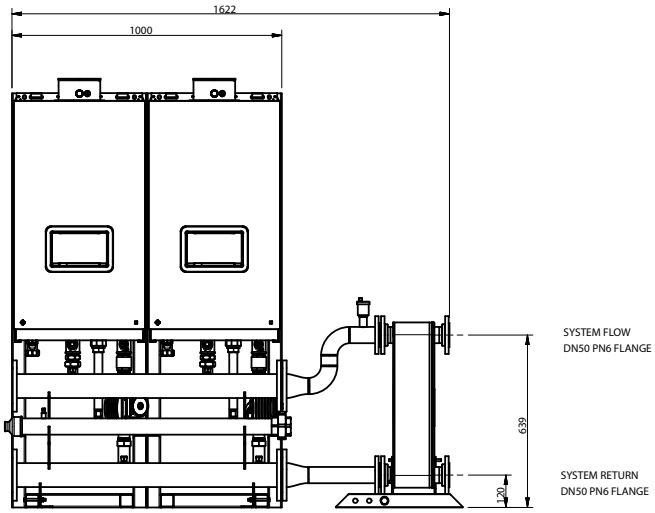

5.2.8 INSTALLATION DRAWING OF 3 BOILERS ON DN80 FRAME & HEADER KIT WITH 300 kW PLATE HEAT EXCHANGER

NOTES:

1. PLATE HEAT EXCHANGER AND GAS CONNECTIONS CAN BE EITHER THE LHS OR RHS OF THE ASSEMBLY TO SUIT THE INSTALLATION.

2. OPTIONAL 300 kW PLATE HEAT EXCHANGER (XB150039) ONE PER CASCADE.

3. ALL DIMENSIONS IN mm

4. COMPATIBLE BOILERS: 80 kW / 100 kW

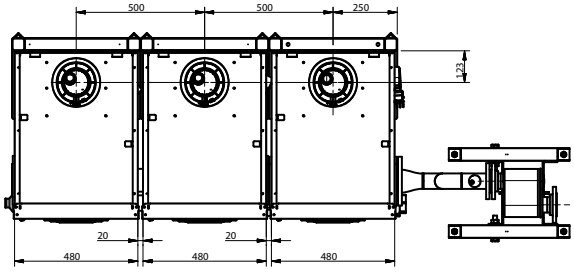

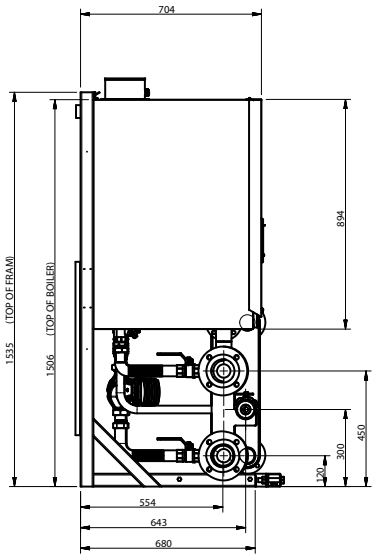

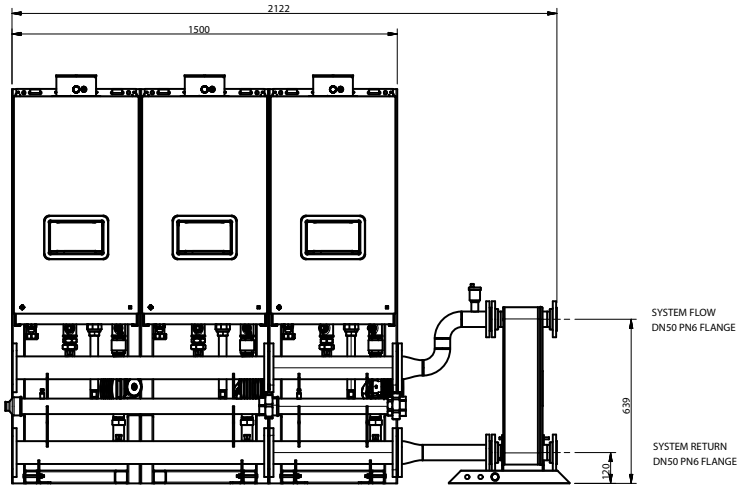

5.2.9 INSTALLATION DRAWING OF 3 BOILERS ON DN80 FRAME & HEADER KIT WITH 450 kW PLATE HEAT EXCHANGER

NOTES:

1. PLATE HEAT EXCHANGER AND GAS CONNECTIONS CAN BE EITHER THE LHS OR RHS OF THE ASSEMBLY TO SUIT THE INSTALLATION.

2. OPTIONAL 450 kW PLATE HEAT EXCHANGER (XB150040) ONE PER CASCADE.

3. ALL DIMENSIONS IN mm

4. COMPATIBLE BOILERS: 120 kW

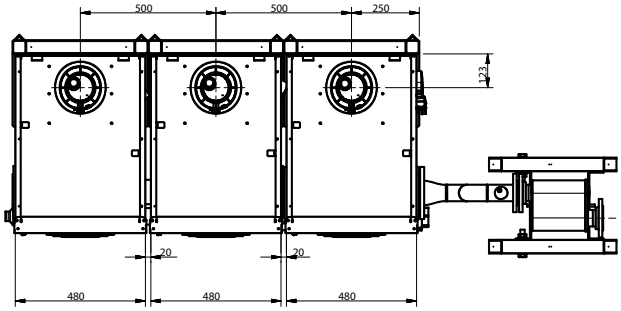

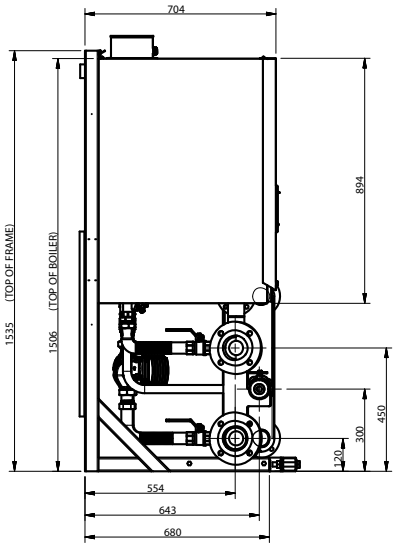

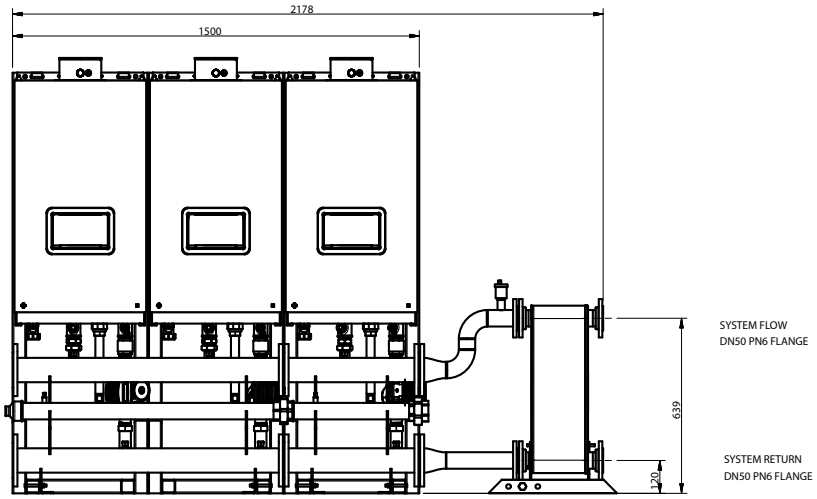

5.2.10 INSTALLATION DRAWING OF 4 BOILERS ON DN80 FRAME & HEADER KIT WITH 450kW PLATE HEAT EXCHANGER

NOTES:

1. PLATE HEAT EXCHANGER AND GAS CONNECTIONS CAN BE EITHER THE LHS OR RHS OF THE ASSEMBLY TO SUIT THE INSTALLATION.

2. OPTIONAL 450 kW PLATE HEAT EXCHANGER (XB150040) ONE PER CASCADE.

3. ALL DIMENSIONS IN mm

4. COMPATIBLE BOILERS: 80 kW / 100 kW

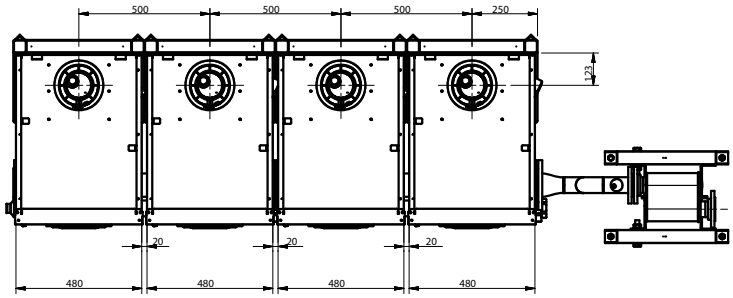

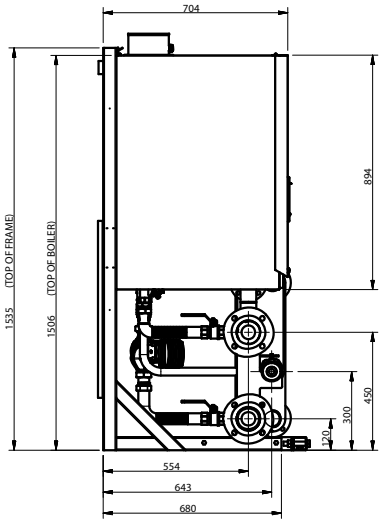

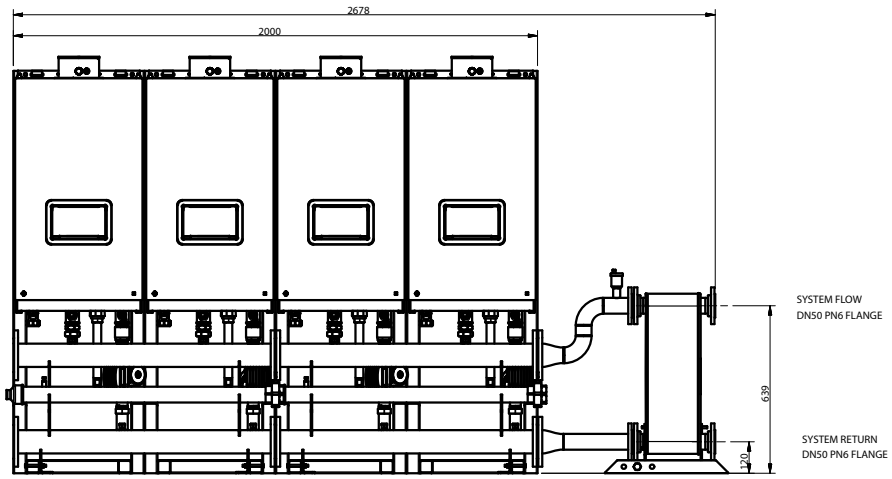

5.2.11 INSTALLATION DRAWING OF 4 BOILERS ON DN80 FRAME & HEADER KIT WITH 600 kW PLATE HEAT EXCHANGER

NOTES:

1. PLATE HEAT EXCHANGER AND GAS CONNECTIONS CAN BE EITHER THE LHS OR RHS OF THE ASSEMBLY TO SUIT THE INSTALLATION.

2. OPTIONAL 600 kW PLATE HEAT EXCHANGER (XB150041) ONE PER CASCADE.

3. ALL DIMENSIONS IN mm

4. COMPATIBLE BOILERS: 120 kW

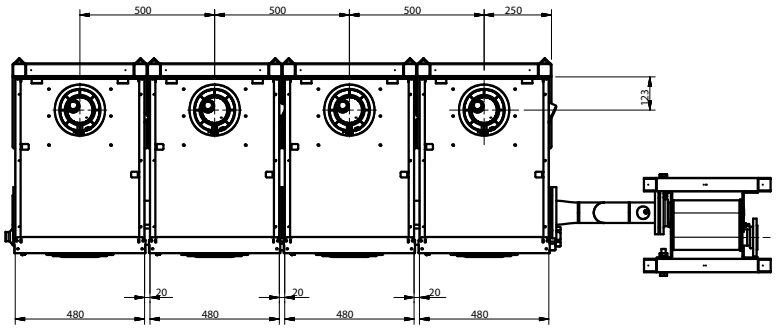

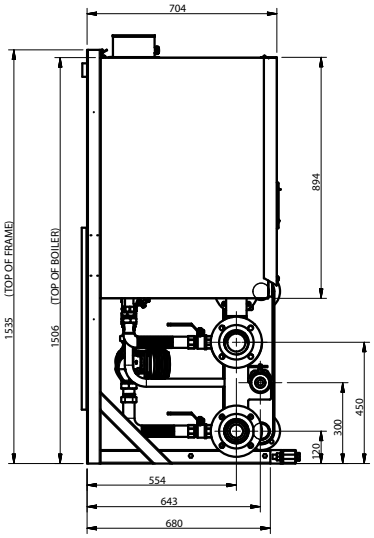

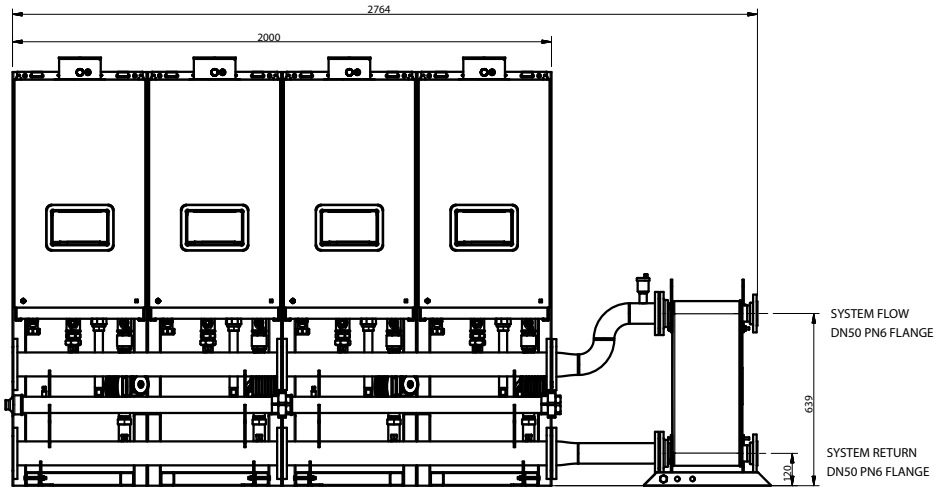

5.2.12 INSTALLATION DRAWING OF 5 BOILERS ON DN80 FRAME & HEADER KIT WITH 450 kW PLATE HEAT EXCHANGER

NOTES:

1. PLATE HEAT EXCHANGER AND GAS CONNECTIONS CAN BE EITHER THE LHS OR RHS OF THE ASSEMBLY TO SUIT THE INSTALLATION.

2. OPTIONAL 450 kW PLATE HEAT EXCHANGER (XB150040) ONE PER CASCADE.

3. ALL DIMENSIONS IN mm

4. COMPATIBLE BOILERS: 80 kW

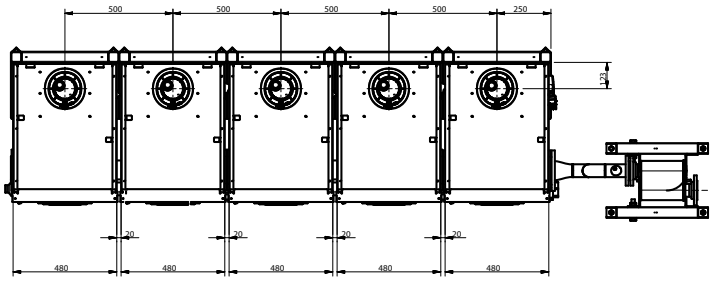

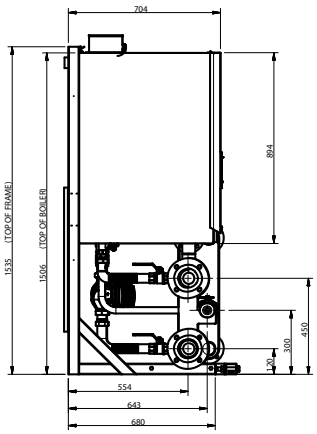

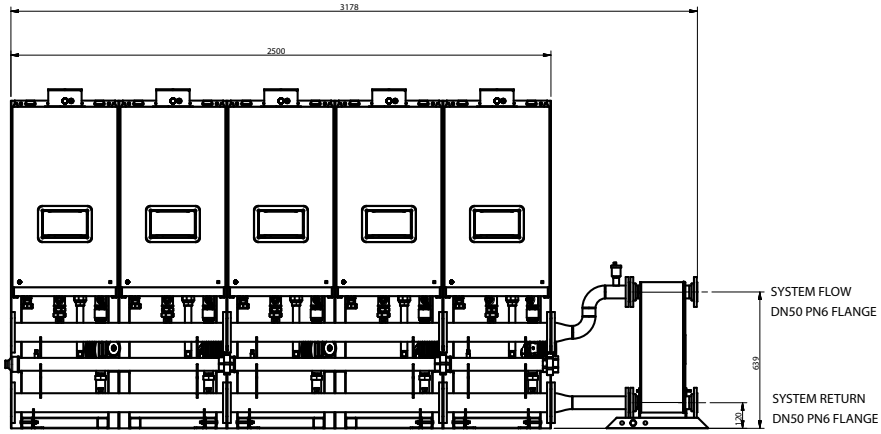

5.2.13 INSTALLATION DRAWING OF 5 BOILERS ON DN80 FRAME & HEADER KIT WITH 600 kW PLATE HEAT EXCHANGER

NOTES:

1. PLATE HEAT EXCHANGER AND GAS CONNECTIONS CAN BE EITHER THE LHS OR RHS OF THE ASSEMBLY TO SUIT THE INSTALLATION.

2. OPTIONAL 600 kW PLATE HEAT EXCHANGER (XB150041) ONE PER CASCADE.

3. ALL DIMENSIONS IN mm

4. COMPATIBLE BOILERS: 100 kW / 120 kW

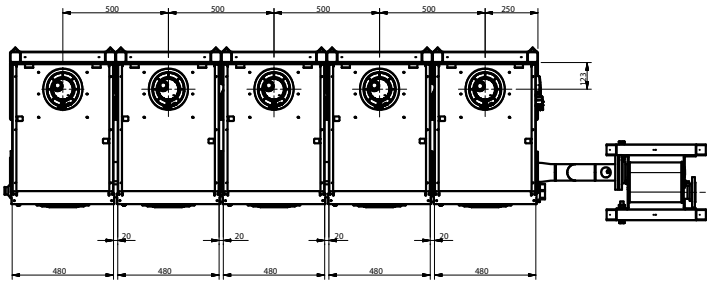

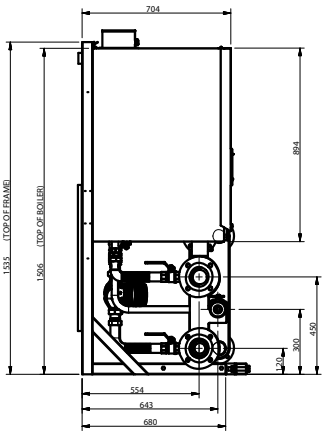

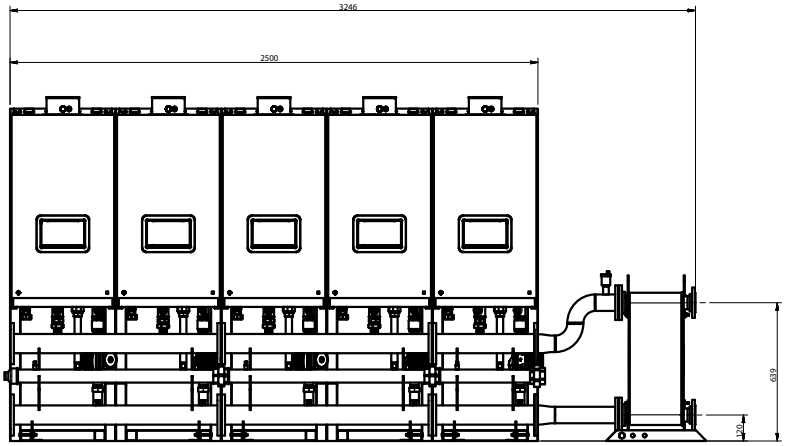

5.2.14 INSTALLATION DRAWING OF 6 BOILERS ON DN80 FRAME & HEADER KIT WITH 600 kW PLATE HEAT EXCHANGER

NOTES:

1. PLATE HEAT EXCHANGER AND GAS CONNECTIONS CAN BE EITHER THE LHS OR RHS OF THE ASSEMBLY TO SUIT THE INSTALLATION.

2. OPTIONAL 600 kW PLATE HEAT EXCHANGER (XB150041) ONE PER CASCADE.

3. ALL DIMENSIONS IN mm

4. COMPATIBLE BOILERS: 80 kW / 100 kW

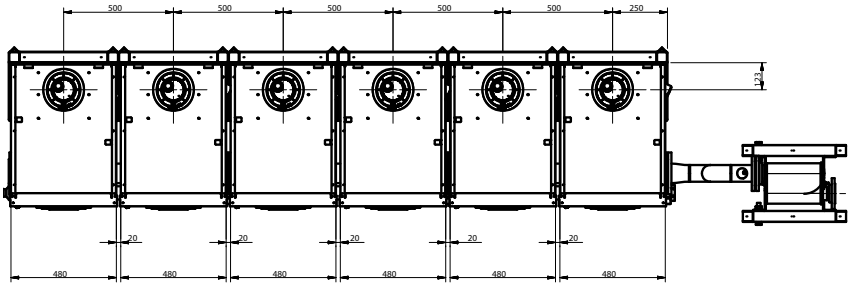

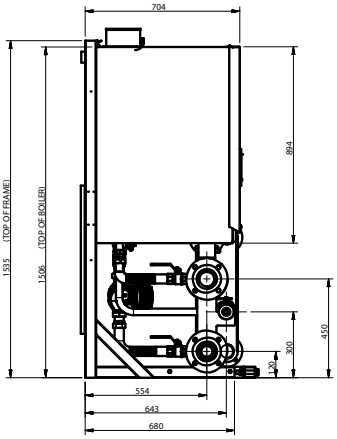

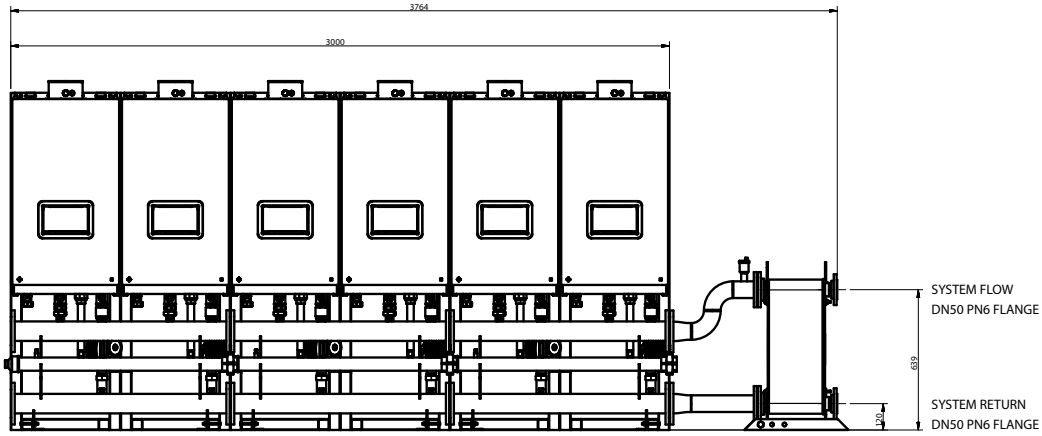

5.2.15 INSTALLATION DRAWING OF 2 BOILERS ON DN100 FRAME & HEADER KIT WITH 300 kW PLATE HEAT EXCHANGER

NOTES:

1. PLATE HEAT EXCHANGER AND GAS CONNECTIONS CAN BE EITHER THE LHS OR RHS OF THE ASSEMBLY TO SUIT THE INSTALLATION.

2. OPTIONAL 300 kW PLATE HEAT EXCHANGER (XB150042) ONE PER CASCADE.

3. ALL DIMENSIONS IN mm

4. COMPATIBLE BOILERS: 150 kW

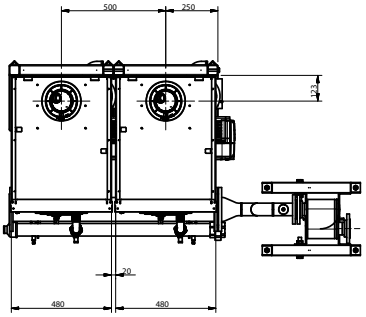

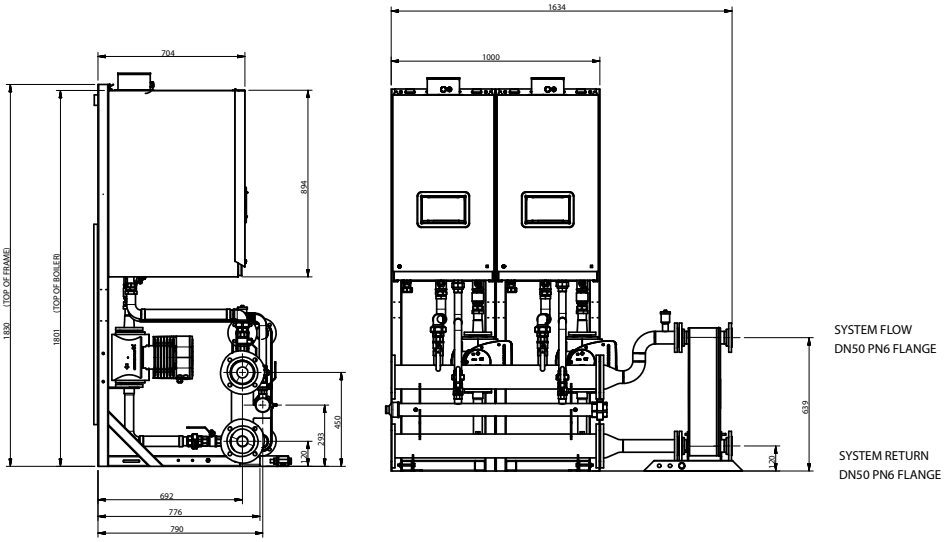

5.2.16 INSTALLATION DRAWING OF 3 BOILERS ON DN100 FRAME & HEADER KIT WITH 450 kW PLATE HEAT EXCHANGER

NOTES:

1. PLATE HEAT EXCHANGER AND GAS CONNECTIONS CAN BE EITHER THE LHS OR RHS OF THE ASSEMBLY TO SUIT THE INSTALLATION.

2. OPTIONAL 450 kW PLATE HEAT EXCHANGER (XB150043) ONE PER CASCADE.

3. ALL DIMENSIONS IN mm

4. COMPATIBLE BOILERS: 150 kW

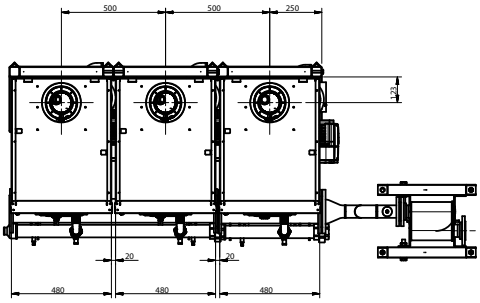

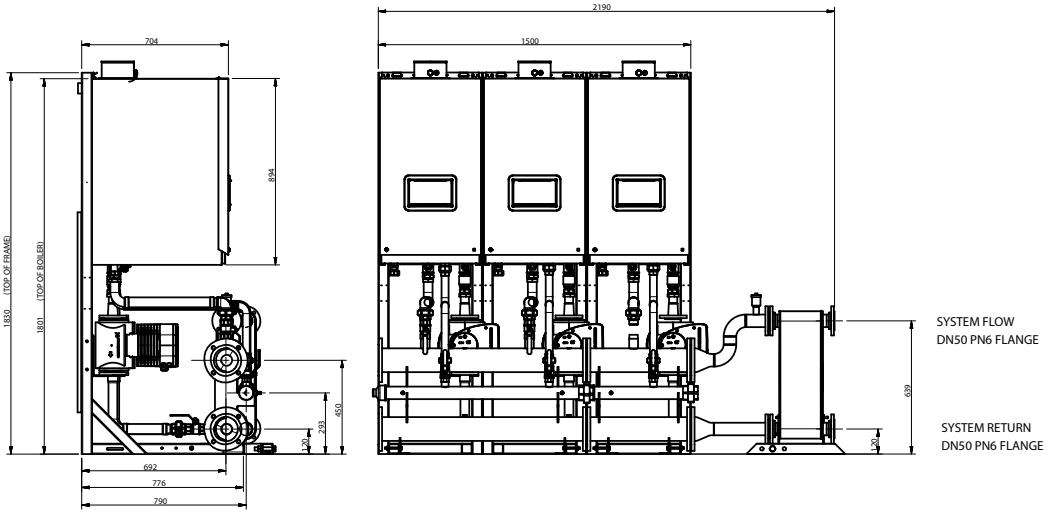

5.2.17 INSTALLATION DRAWING OF 4 BOILERS ON DN100 FRAME & HEADER KIT WITH 600 kW PLATE HEAT EXCHANGER

NOTES:

1. PLATE HEAT EXCHANGER AND GAS CONNECTIONS CAN BE EITHER THE LHS OR RHS OF THE ASSEMBLY TO SUIT THE INSTALLATION.

2. OPTIONAL 600 kW PLATE HEAT EXCHANGER (XB150044) ONE PER CASCADE.

3. ALL DIMENSIONS IN mm

4. COMPATIBLE BOILERS: 150 kW

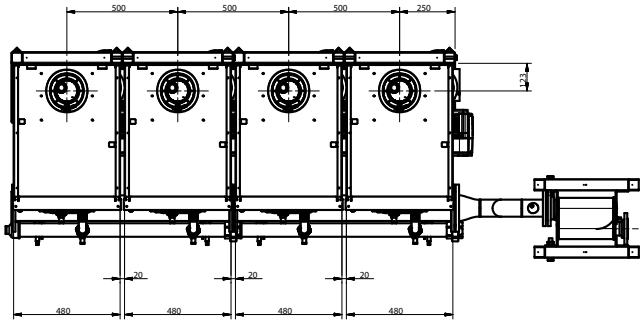

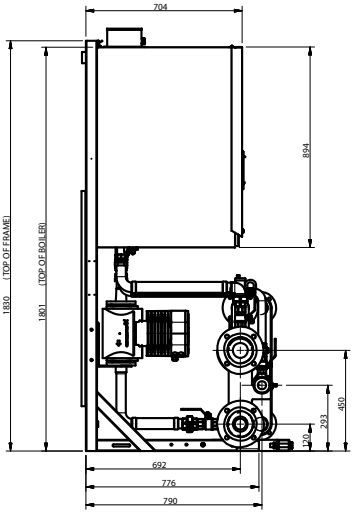

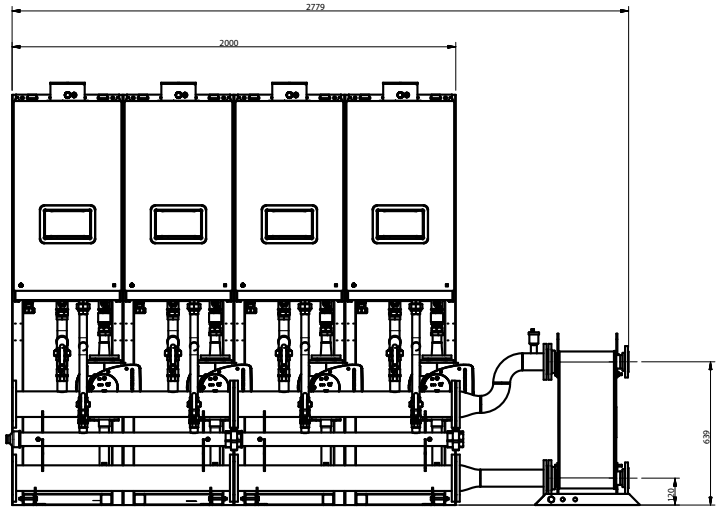

SYSTEM FLOW
DN50 PN6 FLANGE

SYSTEM RETURN
DN50 PN6 FLANGE

5.2.18 INSTALLATION DRAWING OF 5 BOILERS ON DN100 FRAME & HEADER KIT WITH 750 kW PLATE HEAT EXCHANGER

NOTES:

1. PLATE HEAT EXCHANGER AND GAS CONNECTIONS CAN BE EITHER THE LHS OR RHS OF THE ASSEMBLY TO SUIT THE INSTALLATION.

2. OPTIONAL 750 kW PLATE HEAT EXCHANGER (XB150045) ONE PER CASCADE.

3. ALL DIMENSIONS IN mm

4. COMPATIBLE BOILERS: 150 kW

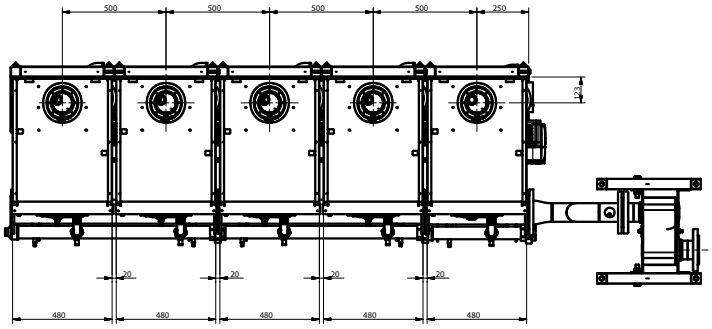

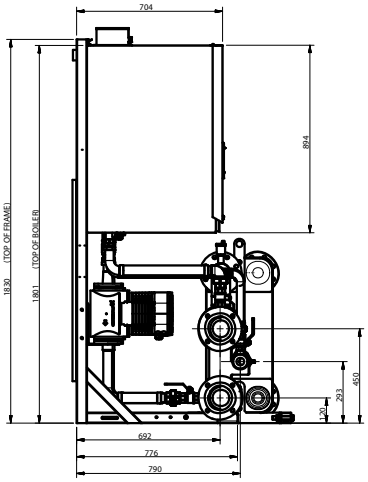

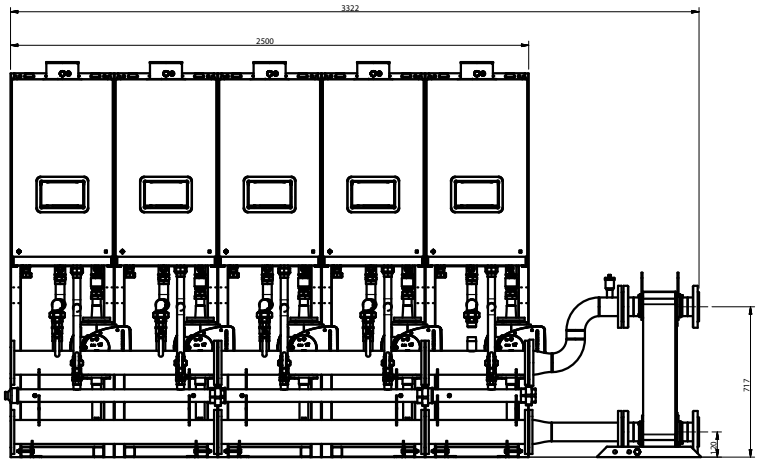

SYSTEM FLOW
DN80 PN6 FLANGE

SYSTEM RETURN
DN80 PN6 FLANGE

5.2.19 INSTALLATION DRAWING OF 6 BOILERS ON DN100 FRAME & HEADER KIT WITH 900 kW PLATE HEAT EXCHANGER

NOTES:

1. PLATE HEAT EXCHANGER AND GAS CONNECTIONS CAN BE EITHER THE LHS OR RHS OF THE ASSEMBLY TO SUIT THE INSTALLATION.

2. OPTIONAL 900 kW PLATE HEAT EXCHANGER (XB150046) ONE PER CASCADE.

3. ALL DIMENSIONS IN mm

4. COMPATIBLE BOILERS: 150 kW

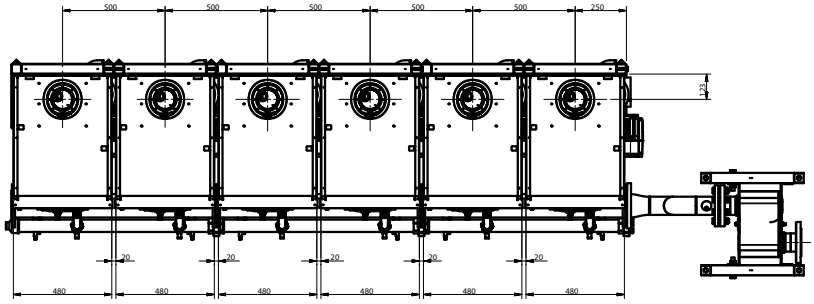

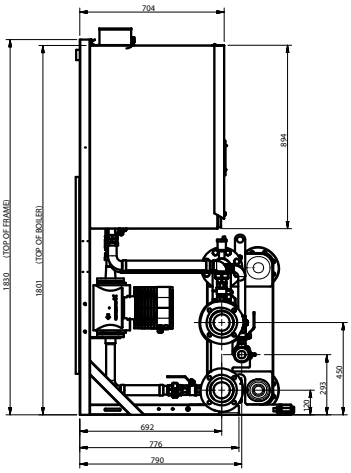

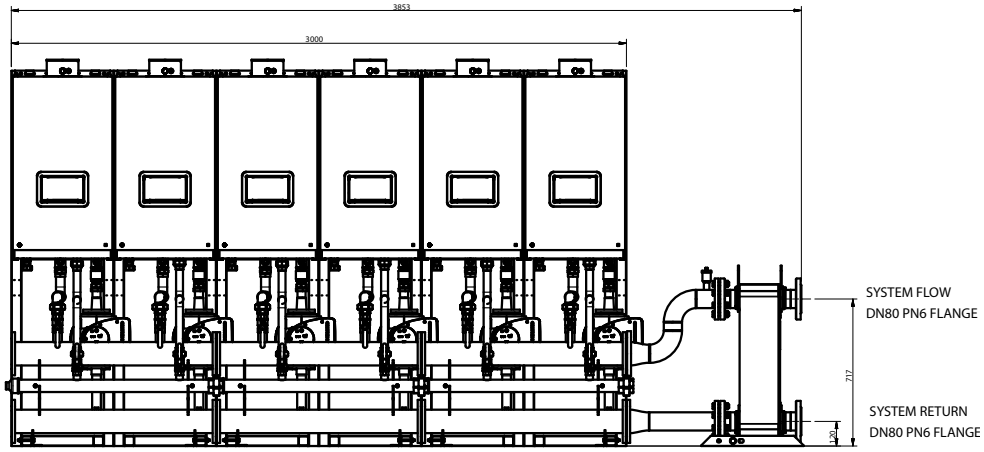

NOTES

NOTES

NOTES

ACV U.K. Limited
St. David's Business Park,
Dalgety Bay
Fife, Scotland
KY11 9PF

Tel: 0044 (0)1383 820100

www.acv.com/gb

ACV pursues a policy of continuing improvement in the design and performance of its products. The right is therefore reserved to vary specification without notice.